UDA1384

Multichannel audio coder-decoder

Rev. 02 — 17 January 2005 Product data sheet

1. General description

The UDA1384 is a single-chip consisting of 4 plus 1 Analog-to-Digital Converters (ADC) and 6 Digital-to-Analog Converters (DAC) with signal processing features employing bitstream conversion techniques. The multichannel configuration makes the device eminently suitable for use in digital audio equipment which incorporates surround feature.

The UDA1384 supports conventional 2 channels per line data transfer conformable to the I^2S-bus format with word lengths of up to 24 bits, the MSB-justified format with word lengths of up to 24 bits and the LSB-justified format with word lengths of 16 bits, 20 bits and 24 bits, as well as 4 channels to 6 channels per line transfer mode. The device also supports a combination of the MSB-justified output format and the LSB-justified input format. The UDA1384 has special sound processing features in the Direct Stream Digital (DSD) playback mode, de-emphasis, volume and mute which can be controlled via the L3-bus or I^2C-bus interface.

2. Features

2.1 General

- 2.7 V to 3.6 V power supply
- 5 V tolerant digital inputs
- 24-bit data path
- Selectable control: via L3-bus or I^2C-bus microcontroller interface
- Supports sample frequency ranges for:
  - Audio ADC: f_s = 16 kHz to 100 kHz
  - Voice ADC: f_s = 7 kHz to 50 kHz
  - Audio DAC: f_s = 16 kHz to 200 kHz
- Separate power control for ADC and DAC
- ADC plus integrated high-pass filter to cancel DC offset
- Integrated digital filter plus DAC
- Slave mode only applications
- Easy application

2.2 Multiple format data interface

- Audio interface supports standard I^2S-bus, MSB-justified, LSB-justified and two multichannel formats
- Voice interface supports I^2S-bus and mono channel formats

2.3 Digital sound processing

- Control via L3-bus or I^2C-bus:
  - Channel independent digital logarithmic volume
  - Digital de-emphasis for f_s = 32 kHz, 44.1 kHz, 48 kHz or 96 kHz
  - Soft or quick mute
  - Output signal polarity control

2.4 Advanced audio configuration

- Inputs:
  - 4 single-ended audio inputs (2 × stereo) with programmable gain amplifiers
  - 1 single-ended voice input
- Outputs:
  - 6 differential audio outputs (3 × stereo)
- DSD mode to support stereo DSD playback
- High linearity, wide dynamic range and low distortion
- DAC digital filter with selectable sharp or soft roll-off

3. Applications

- Excellently suitable for multichannel home audio-video application

4. Quick reference data

Table 1: Quick reference data

$V_{DDD} = V_{DDA(AD)} = V_{DDA(DA)} = 3.3$ V; $T_{amb} = 25\,°C$; $R_L = 22\,k\Omega$; all voltages referenced to ground (pins V_{SS}); unless otherwise specified.

Symbol	Parameter	Conditions	Min	Typ	Max	Unit
Supplies						
$V_{DDA(AD)}$	ADC analog supply voltage		2.7	3.3	3.6	V
$V_{DDA(DA)}$	DAC analog supply voltage		2.7	3.3	3.6	V
V_{DDD}	digital supply voltage		2.7	3.3	3.6	V
$I_{DDA(AD)}$	ADC analog supply current	f_{ADC} = 48 kHz	-	30	-	mA
$I_{DDA(DA)}$	DAC analog supply current	f_{DAC} = 48 kHz	-	20	-	mA
I_{DDD}	digital supply current	$f_{ADC} = f_{DAC}$ = 48 kHz; f_{VOICE} = 48 kHz	-	31	-	mA

© Koninklijke Philips Electronics N.V. 2005. All rights reserved.

Table 1: Quick reference data *...continued*

$V_{DDD} = V_{DDA(AD)} = V_{DDA(DA)} = 3.3$ V; $T_{amb} = 25$ °C; $R_L = 22$ kΩ; all voltages referenced to ground (pins V_{SS}); unless otherwise specified.

Symbol	Parameter	Conditions		Min	Typ	Max	Unit
$I_{DDD(pd)}$	digital supply current in Power-down mode	audio and voice ADCs power-down		-	18	-	mA
		DAC power-down		-	14	-	mA
T_{amb}	ambient temperature			–20	-	+85	°C
Audio analog-to-digital converter							
D_0	digital output level	at 0 dB setting; 900 mV input	[1] [2]	–2.5	–1.2	–0.7	dB
(THD+N)/S	total harmonic distortion-plus-noise to signal ratio	at –1 dBFS		-	–88	–82	dB
		at –60 dBFS; A-weighted		-	–37	–30	dB
S/N	signal-to-noise ratio	code = 0; A-weighted		89	98	-	dB
α_{cs}	channel separation			-	100	-	dB
Digital-to-analog converter							
Differential mode							
$V_{o(rms)}$	output voltage (RMS value)	at 0 dBFS digital input		1.9	2.0	2.1	V
(THD+N)/S	total harmonic distortion-plus-noise to signal ratio	at 0 dBFS		-	–98	–89	dB
		at –60 dBFS; A-weighted		-	–50	–45	dB
S/N	signal-to-noise ratio	code = 0; A-weighted		100	110	-	dB
α_{cs}	channel separation			-	114	-	dB
Single-ended mode							
$V_{o(rms)}$	output voltage (RMS value)	at 0 dBFS digital input		-	1.0	-	V
(THD+N)/S	total harmonic distortion-plus-noise to signal ratio	at 0 dBFS		-	–88	-	dB
		at –60 dBFS; A-weighted		-	–45	-	dB
S/N	signal-to-noise ratio	code = 0; A-weighted		-	105	-	dB
α_{cs}	channel separation			-	110	-	dB

[1] The input voltage can be up to 2 V (RMS) when the current through the ADC input pin is limited to approximately 1 mA by using a series resistor.

[2] The input voltage to the ADC scales proportionally with the power supply voltage.

5. Ordering information

Table 2: Ordering information

Type number	Package		
	Name	Description	Version
UDA1384H	QFP44	plastic quad flat package; 44 leads (lead length 1.3 mm); body 10 × 10 × 1.75 mm	SOT307-2

© Koninklijke Philips Electronics N.V. 2005. All rights reserved.

6. Block diagram

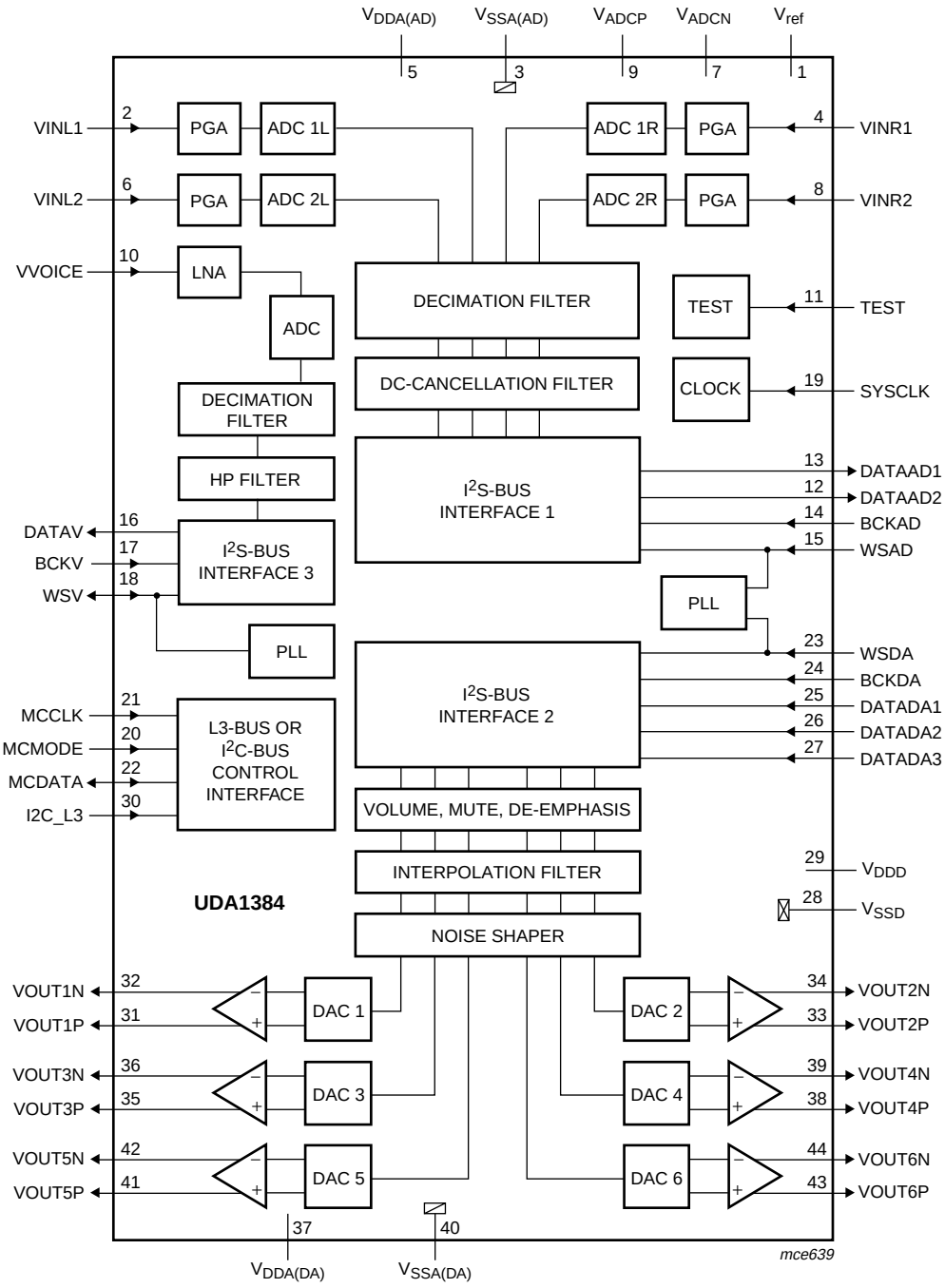

Fig 1. Block diagram

© Koninklijke Philips Electronics N.V. 2005. All rights reserved.

7. Pinning information

7.1 Pinning

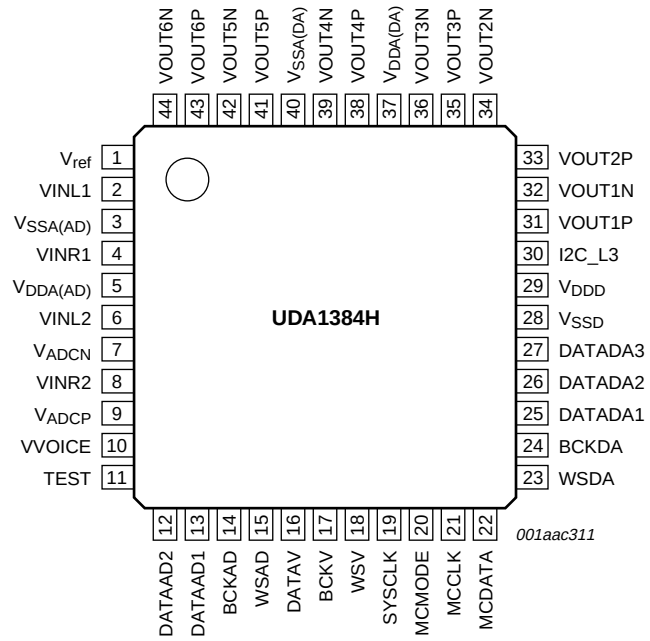

Fig 2. Pin configuration

7.2 Pin description

Table 3: Pin description

Symbol	Pin	Type	Description
V_{ref}	1	AIO	ADC reference voltage
VINL1	2	AIO	ADC 1 input left
$V_{SSA(AD)}$	3	AGND	ADC analog ground
VINR1	4	AIO	ADC 1 input right
$V_{DDA(AD)}$	5	AS	ADC analog supply voltage
VINL2	6	AIO	ADC 2 input left
V_{ADCN}	7	AIO	ADC reference voltage N
VINR2	8	AIO	ADC 2 input right
V_{ADCP}	9	AIO	ADC reference voltage P
VVOICE	10	AIO	voice ADC input
TEST	11	DID	test input; must be connected to digital ground (V_{SSD}) in application
DATAAD2	12	DO	ADC 2 data output
DATAAD1	13	DO	ADC 1 data output
BCKAD	14	DIS	ADC bit clock input
WSAD	15	DI	ADC word select input

© Koninklijke Philips Electronics N.V. 2005. All rights reserved.

Table 3: Pin description *...continued*

Symbol	Pin	Type	Description
DATAV	16	DO	voice data output
BCKV	17	DIS	voice bit clock input
WSV	18	DIO	voice word select input or output
SYSCLK	19	DIS	system clock input: $256f_s$, $384f_s$, $512f_s$ or $768f_s$
MCMODE	20	DI	L3-bus L3MODE input or I^2C-bus DAC mute control input
MCCLK	21	DIS	L3-bus L3CLOCK input or I^2C-bus SCL input
MCDATA	22	IIC	L3-bus L3DATA input and output or I^2C-bus SDA input and output
WSDA	23	DI	DAC word select input
BCKDA	24	DIS	DAC bit clock input
DATADA1	25	DI	DAC channel 1 and channel 2 data input
DATADA2	26	DI	DAC channel 3 and channel 4 data input
DATADA3	27	DI	DAC channel 5 and channel 6 data input
V_{SSD}	28	DGND	digital ground
V_{DDD}	29	DS	digital supply voltage
I2C_L3	30	DI	selection input for L3-bus or I^2C-bus control
VOUT1P	31	AIO	DAC 1 positive output
VOUT1N	32	AIO	DAC 1 negative output
VOUT2P	33	AIO	DAC 2 positive output
VOUT2N	34	AIO	DAC 2 negative output
VOUT3P	35	AIO	DAC 3 positive output
VOUT3N	36	AIO	DAC 3 negative output
$V_{DDA(DA)}$	37	AS	DAC analog supply voltage
VOUT4P	38	AIO	DAC 4 positive output
VOUT4N	39	AIO	DAC 4 negative output
$V_{SSA(DA)}$	40	AGND	DAC analog ground
VOUT5P	41	AIO	DAC 5 positive output
VOUT5N	42	AIO	DAC 5 negative output
VOUT6P	43	AIO	DAC 6 positive output
VOUT6N	44	AIO	DAC 6 negative output

[1] See Table 4.

Table 4: Pin types

Type	Description
AGND	analog ground
AIO	analog input and output
AS	analog supply
DGND	digital ground
DI	digital input
DID	digital input with internal pull-down resistor
DIO	digital input and output

© Koninklijke Philips Electronics N.V. 2005. All rights reserved.

Table 4: Pin types *...continued*

Type	Description
DIS	digital Schmitt-triggered input
DO	digital output
DS	digital supply
IIC	input and open-drain output for I^2C-bus

8. Functional description

8.1 System clock

The UDA1384 operates in slave mode only; this means that in all applications the system must provide either the system clock (the bit clock for the voice ADC) or the word clock.

The audio ADC part, the voice ADC part and the DAC part can operate at different sampling frequencies (DAC-WS and ADC-WS modes) as well as a common frequency (SYSCLK, WSDA and DSD modes).

The voice ADC part supports a sampling frequency up to 50 kHz and the audio ADC supports a sampling frequency up to 100 kHz. The DAC sampling frequency range is extended up to 200 kHz with the range above 100 kHz being supported through 192 kHz sampling mode, which halves the oversampling ratio of SYSCLK and internal clocks.

The mode of operation of the audio and voice channels can be set via the L3-bus or I^2C-bus microcontroller interface and are summarized in Table 5 and Table 6.

When applied, the system clock must be locked in frequency to the corresponding digital interface clocks.

The voice ADC part can either receive or generate the WSV signal as shown in Table 6.

Table 5: Audio ADC and DAC operating clock mode

Mode	Audio ADC		Audio DAC	
	Clock	Frequency	Clock	Frequency
SYSCLK	SYSCLK	$256f_s$, $384f_s$, $512f_s$ or $768f_s$	SYSCLK	$256f_s$, $384f_s$, $512f_s$ or $768f_s$
			SYSCLK	$128f_s$, $192f_s$, $256f_s$ or $384f_s$; 192 kHz sampling mode
DAC-WS	SYSCLK	$256f_s$, $384f_s$, $512f_s$ or $768f_s$	WSDA	$1f_s$
ADC-WS	WSAD	$1f_s$	SYSCLK	$256f_s$, $384f_s$, $512f_s$ or $768f_s$
			SYSCLK	$128f_s$, $192f_s$, $256f_s$ or $384f_s$; 192 kHz sampling mode
WSDA	WSDA	$1f_s$	WSDA	$1f_s$
DSD	SYSCLK	44.1 kHz × 512	SYSCLK	44.1 kHz × 512

Table 6: Voice ADC operating clock mode

Mode	Voice ADC	
	Bit clock frequency (BCKV)	Word select (WSV)
WSV-in	input: $32f_s$, $64f_s$, $128f_s$ or $256f_s$	input
WSV-out	input: $32f_s$, $64f_s$, $128f_s$ or $256f_s$	output

© Koninklijke Philips Electronics N.V. 2005. All rights reserved.

8.2 Audio analog-to-digital converter (audio ADC)

The audio analog-to-digital front-end of the UDA1384 consists of 4-channel single-ended ADCs with programmable gain stage (from 0 dB to 24 dB with 3 dB steps), controlled via the microcontroller interface. Using the PGA feature, it is possible to accept an input signal of 900 mV (RMS) or 1.8 V (RMS) if an external resistor of 10 kΩ is used in series. The schematic of audio ADC front-end is shown in Figure 3.

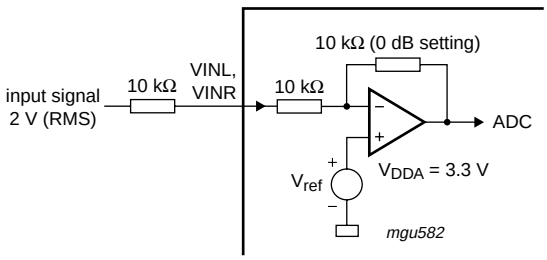

Fig 3. Schematic of audio ADC front-end

8.3 Voice Analog-to-Digital Converter (voice ADC)

The voice analog-to-digital front-end of the UDA1384 consists of a single-channel single-ended ADC with a fixed gain (26 dB) Low Noise Amplifier (LNA). Together with the digital variable gain amplification stage, the voice ADC provides optimal processing and reproduction of the microphone signal. The supported sampling frequency range is from 7 kHz to 50 kHz. Power-down of the LNA and the ADC can be controlled separately.

8.4 Decimation filter of audio ADC

The decimation from $64f_s$ is performed in two stages. The first stage realizes $\left(\frac{\sin x}{x}\right)^4$ characteristics with a decimation factor of 8. The second stage consists of three half-band filters, each decimating by a factor of 2. The filter characteristics are shown in Table 7.

Table 7: Decimation filter characteristics (audio ADC)

Item	Condition	Value (dB)
Pass-band ripple	$0f_s$ to $0.45f_s$	±0.01
Pass-band droop	$0.45f_s$	–0.2
Stop band	> $0.55f_s$	–70
Dynamic range	$0f_s$ to $0.45f_s$	> 135

8.5 Decimation filter of voice ADC

The voice ADC decimation filter is realized with the combination of a Finite Impulse Response (FIR) filter and Infinite Impulse Response (IIR) filter for shorter group delay. The filter characteristics are shown in Table 8. During the power-on sequence, the output of the ADC is hard muted for a certain period. This hard-mute time can be chosen between 1024 samples and 2048 samples.

© Koninklijke Philips Electronics N.V. 2005. All rights reserved.

Table 8: Decimation filter characteristics (voice ADC)

Item	Condition	Value (dB)
Pass-band ripple	$0f_s$ to $0.45f_s$	±0.05
Pass-band droop	$0.45f_s$	–0.2
Stop band	> $0.55f_s$	–65
Dynamic range	$0f_s$ to $0.45f_s$	> 110

8.6 Interpolation filter of DAC

The digital interpolation filter interpolates from $1f_s$ to $128f_s$ (or to $64f_s$ in the 192 kHz sampling mode) by cascading FIR filters, and has two sets of filter coefficients for sharp and slow roll-off as given in Table 9 and Table 10.

Table 9: Interpolation filter characteristics (sharp roll-off)

Item	Condition	Value (dB)
Pass-band ripple	$0f_s$ to $0.45f_s$	±0.002
Stop band	> $0.55f_s$	–75
Dynamic range	$0f_s$ to $0.45f_s$	> 135

Table 10: Interpolation filter characteristics (slow roll-off)

Item	Condition	Value (dB)
Pass-band ripple	$0f_s$ to $0.22f_s$	±0.002
Pass-band droop	$0.45f_s$	–3.1
Stop band	> $0.78f_s$	–94
Dynamic range	$0f_s$ to $0.22f_s$	> 135

8.7 Noise shaper of DAC

The 3rd-order noise shaper operates at either $128f_s$ or $64f_s$ (in the 192 kHz sampling mode), and converts the 24-bit input signal into a 5-bit signal stream. The noise shaper shifts in-band quantization noise to frequencies well above the audio band. This noise shaping technique enables high signal-to-noise ratios to be achieved.

8.8 Digital mixer

The UDA1384 has 6 digital mixers inside the interpolator (see Figure 4). The ADC signals can be mixed with the I^2S-bus input signals. The mixing of the ADC signals can be selected by the bits MIX[1:0].

© Koninklijke Philips Electronics N.V. 2005. All rights reserved.

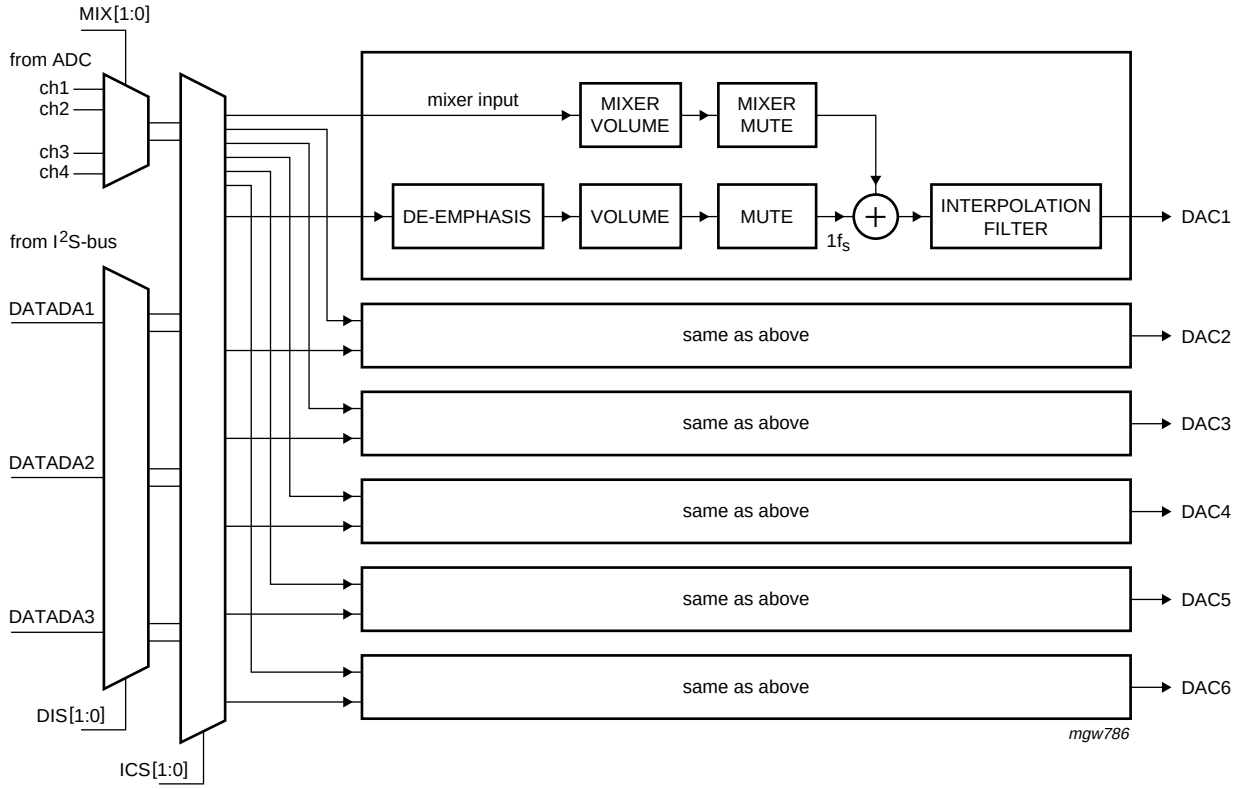

Fig 4. Block diagram of DAC mixer

8.9 Audio digital-to-analog converters

The audio digital-to-analog front-end of the UDA1384 consists of 6-channel differential SDACs: an SDAC is a multi-bit DAC based upon switched resistors. To minimize data dependent modulation effects, a Dynamic Element Matching (DEM) algorithm scrambler circuit and DC current compensation circuit are implemented with the SDAC.

8.10 Power-on reset

The UDA1384 has an internal power-on reset circuit which initializes the device (see Figure 5). All the digital sound processing features and the system controlling features are set to their default values in the L3-bus and the I^{2}C-bus modes.

The reset time (see Figure 6) is determined by an external capacitor which is connected between pin V_{ref} and ground. The reset time should be at least 250 µs for V_{ref} < 1.25 V. When $V_{DDA(AD)}$ is switched off, the device will be reset again for V_{ref} < 0.75 V.

During the reset time, the system clock should be running.

© Koninklijke Philips Electronics N.V. 2005. All rights reserved.

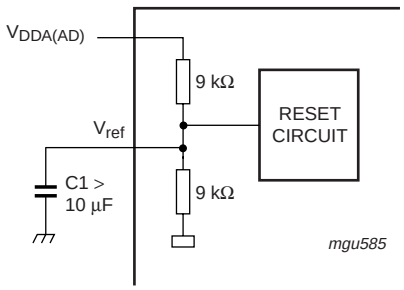

Fig 5. Power-on reset circuit

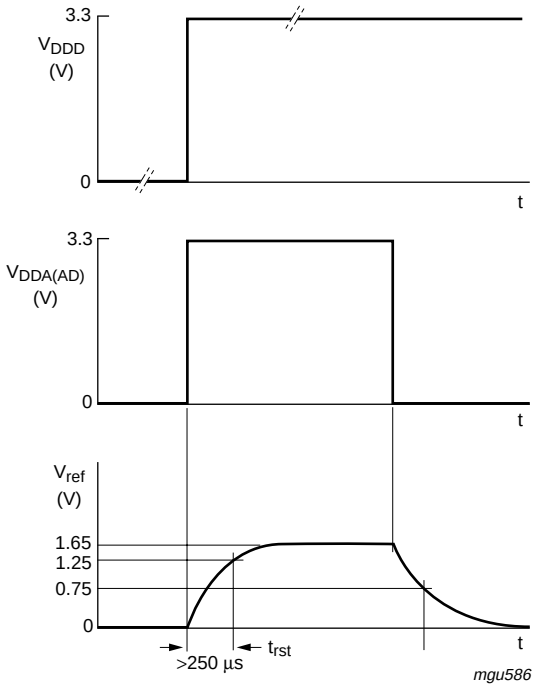

Fig 6. Power-on reset timing

8.11 Audio digital interface

The following audio formats can be selected via the microcontroller interface:

- I²S-bus format with data word length of up to 24 bits
- MSB-justified format with data word length of up to 24 bits
- LSB-justified format with data word length of 16 bits, 20 bits or 24 bits
- Multichannel formats with data word length of 20 bits or 24 bits. The used data lines are DATAAD1 and DATADA1 and the sampling frequency must be below 50 kHz

The formats are illustrated in Figure 7 and Figure 8.

© Koninklijke Philips Electronics N.V. 2005. All rights reserved.

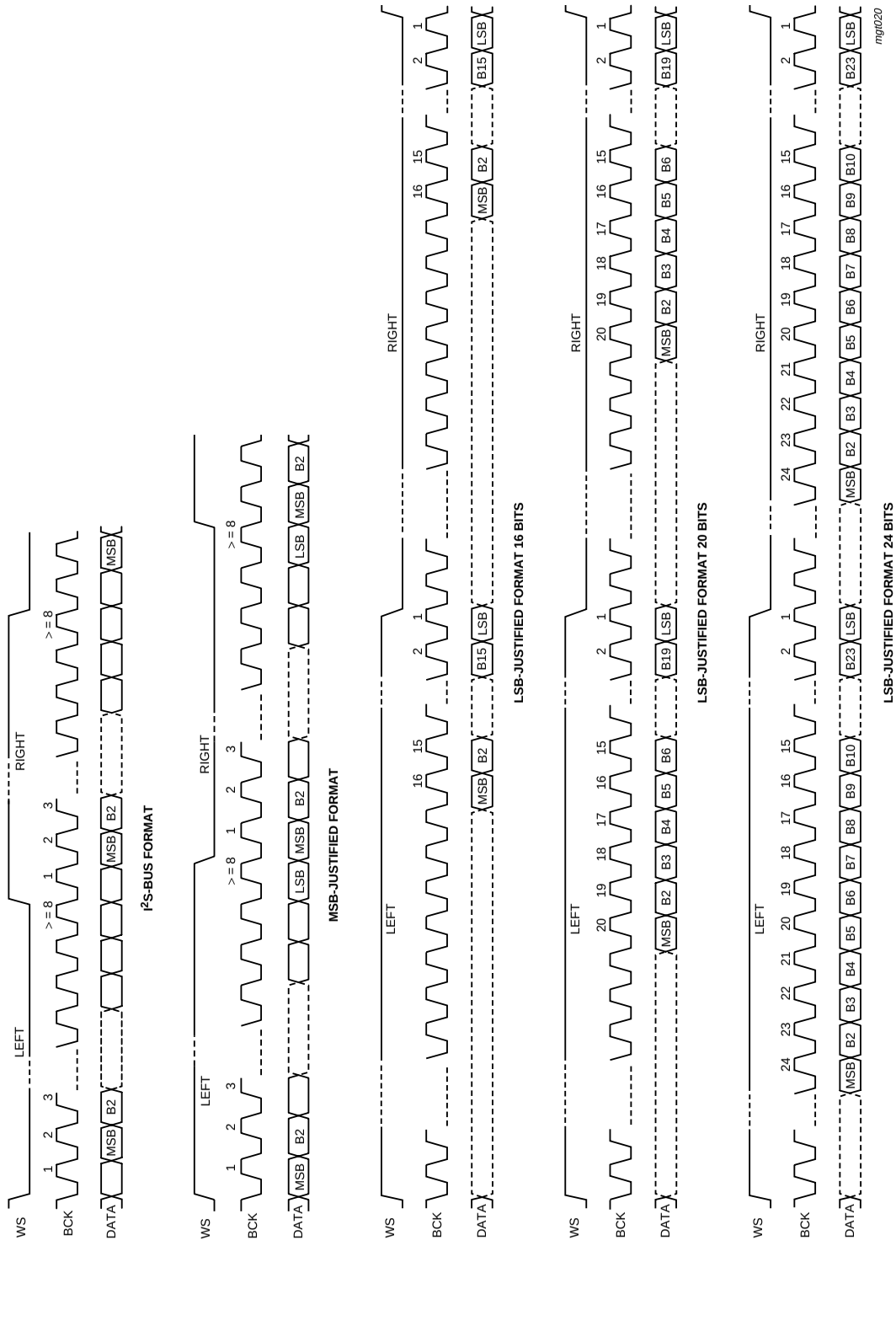

Fig 7. Formats of input and output data (single-channel)

© Koninklijke Philips Electronics N.V. 2005. All rights reserved.

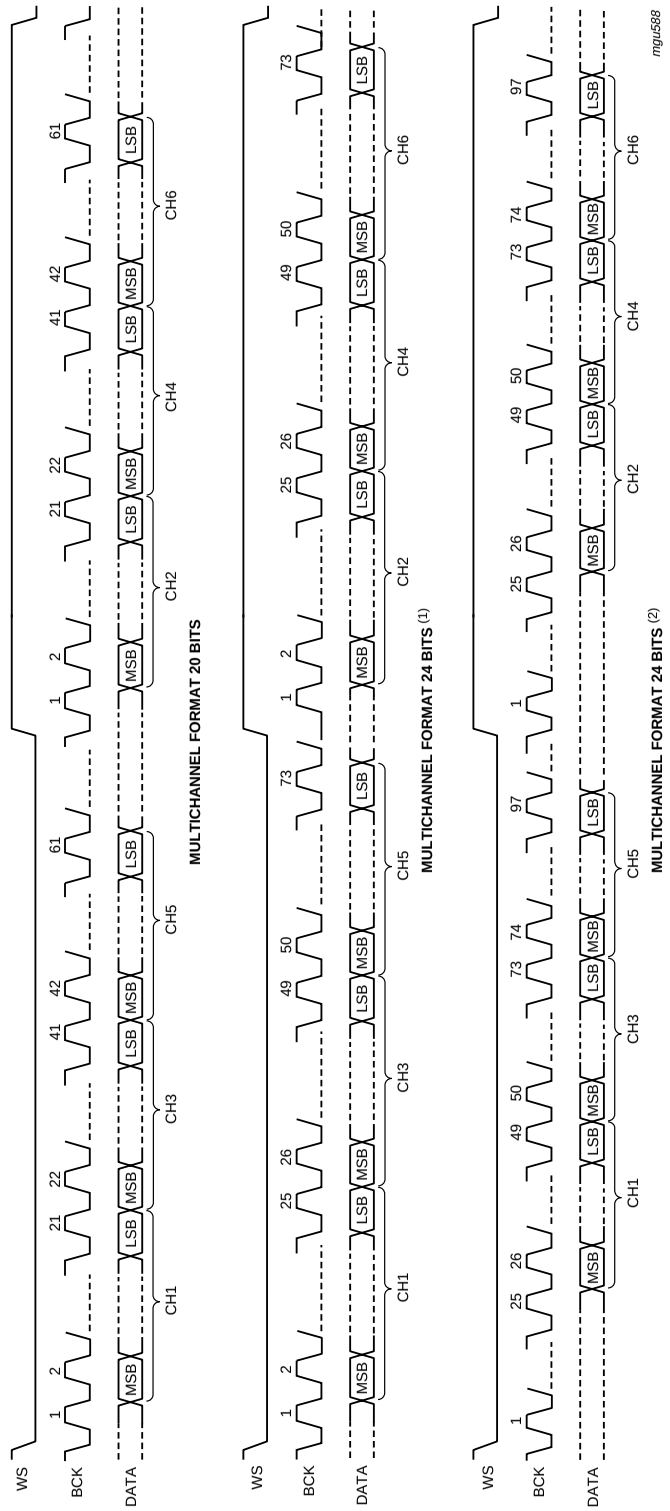

(1) Format 1.
(2) Format 2.

Fig 8. Formats of input and output data (multichannel)

© Koninklijke Philips Electronics N.V. 2005. All rights reserved.

8.12 Voice digital interface

The following voice formats can be selected via the microcontroller interface:

- I²S-bus format with data word length of up to 20 bits. The left and the right channels contain the same data.
- Mono channel format with data word length of up to 20 bits.

The formats are illustrated in Figure 9.

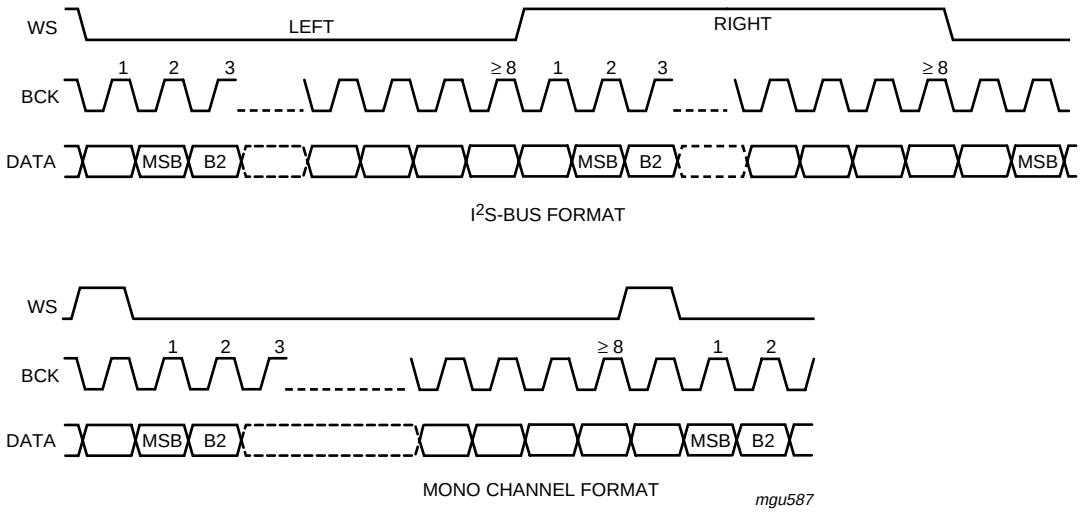

Fig 9. Voice digital interface formats

8.13 DSD mode

The UDA1384 can receive 2.8224 MHz DSD signals and generate 88.2 kHz multibit PCM signals as well as analog signal outputs. The configuration of the UDA1384 in the DSD mode is shown in Figure 10.

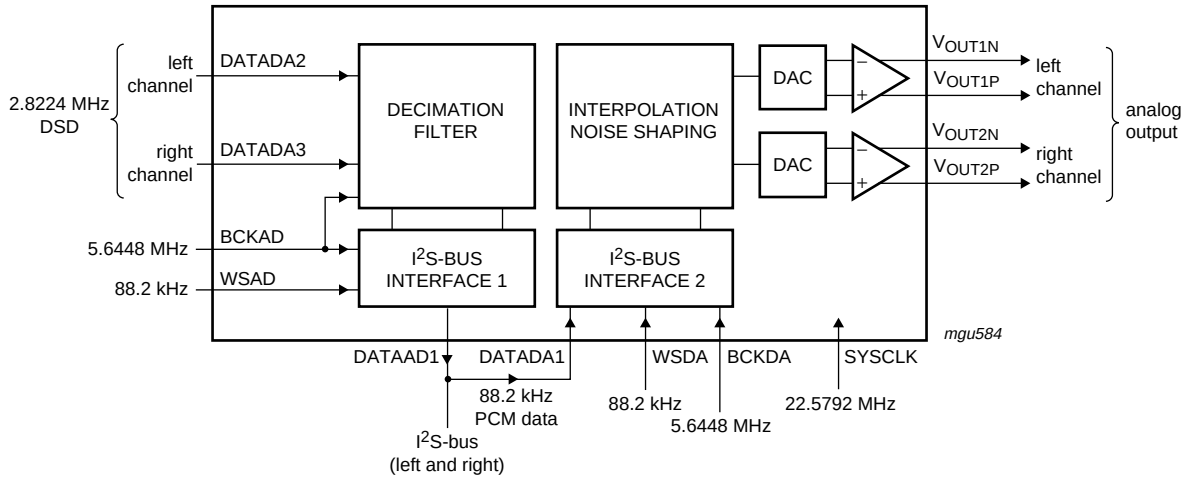

Fig 10. DSD mode

© Koninklijke Philips Electronics N.V. 2005. All rights reserved.

8.14 Microcontroller interface mode

The microcontroller interface mode can be selected as shown in Table 11:

- L3-bus mode when pin I2C_L3 = LOW
- I^2C-bus mode when pin I2C_L3 = HIGH

Table 11: Pin function in the L3-bus or I^2C-bus mode

Pin	Level on pin I2C_L3	
	LOW	HIGH
	L3-bus mode signal	I^2C-bus mode signal
MCCLK	L3CLOCK	SCL
MCDATA	L3DATA	SDA
MCMODE	L3MODE	QMUTE

Table 12: QMUTE

Signal QMUTE	Function
LOW	no muting
HIGH	muting

All the features are accessible with the I^2C-bus interface protocol as with the L3-bus interface protocol.

The detailed description of the device operation in the L3-bus mode and I^2C-bus mode is given in Section 9 and Section 10, respectively.

9. L3-bus interface

9.1 General

The UDA1384 has an L3-bus microcontroller interface and all the digital sound processing features and various system settings can be controlled by a microcontroller.

The exchange of data and control information between the microcontroller and the UDA1384 is LSB first and is accomplished through a serial hardware L3-bus interface comprising the following pins:

- MCCLK: clock line with signal L3CLOCK
- MCDATA: data line with signal L3DATA
- MCMODE: mode line with signal L3MODE

The L3-bus format has two modes of operation:

- Address mode
- Data transfer mode

The address mode is used to select a device for a subsequent data transfer. The address mode is characterized by signal L3MODE = LOW and a burst of 8 pulses for signal L3CLOCK, accompanied by 8 bits (see Figure 11).

© Koninklijke Philips Electronics N.V. 2005. All rights reserved.

The data transfer mode is characterized by signal L3MODE = HIGH and is used to transfer one or more bytes representing a register address, instruction or data.

Basically, two types of data transfers can be defined:

- Write action: data transfer **to** the device
- Read action: data transfer **from** the device.

9.2 Device addressing

The device address consists of one byte with:

- Data Operating Mode (DOM) bits 0 and 1 representing the type of data transfer (see Table 13)
- Address bits 2 to 7 representing a 6-bit device address. The address of the UDA1384 is 01 0100 (bits 2 to 7).

Table 13: Selection of data transfer

DOM		Transfer
Bit 1	Bit 0	
0	0	not used
0	1	not used
1	0	write data or prepare read
1	1	read data

9.3 Register addressing

After sending the device address (including DOM bits), indicating whether the information is to be read or written, one data byte is sent using bit 0 to indicate whether the information will be read or written and bits 1 to 7 for the destination register address.

Basically, there are 3 methods for register addressing:

1. Addressing for write data: bit 0 is logic 0 indicating a write action to the destination register, followed by bits 1 to 7 indicating the register address (see Figure 11).
2. Addressing for prepare read: bit is logic 1, indicating that data will be read from the register (see Figure 12).
3. Addressing for data read action. Here, the device returns a register address prior to sending data from that register. When bit 0 is logic 0, the register address is valid; when bit 0 is logic 1, the register address is invalid (see Figure 12).

© Koninklijke Philips Electronics N.V. 2005. All rights reserved.

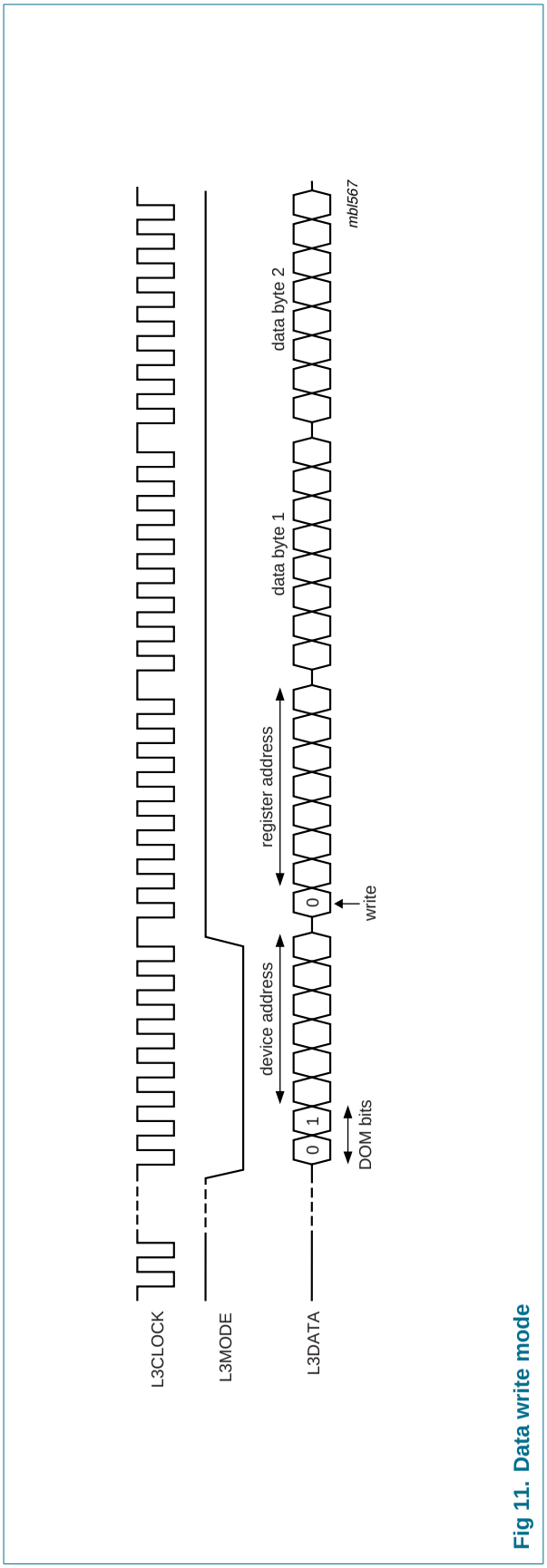

Fig 11. Data write mode

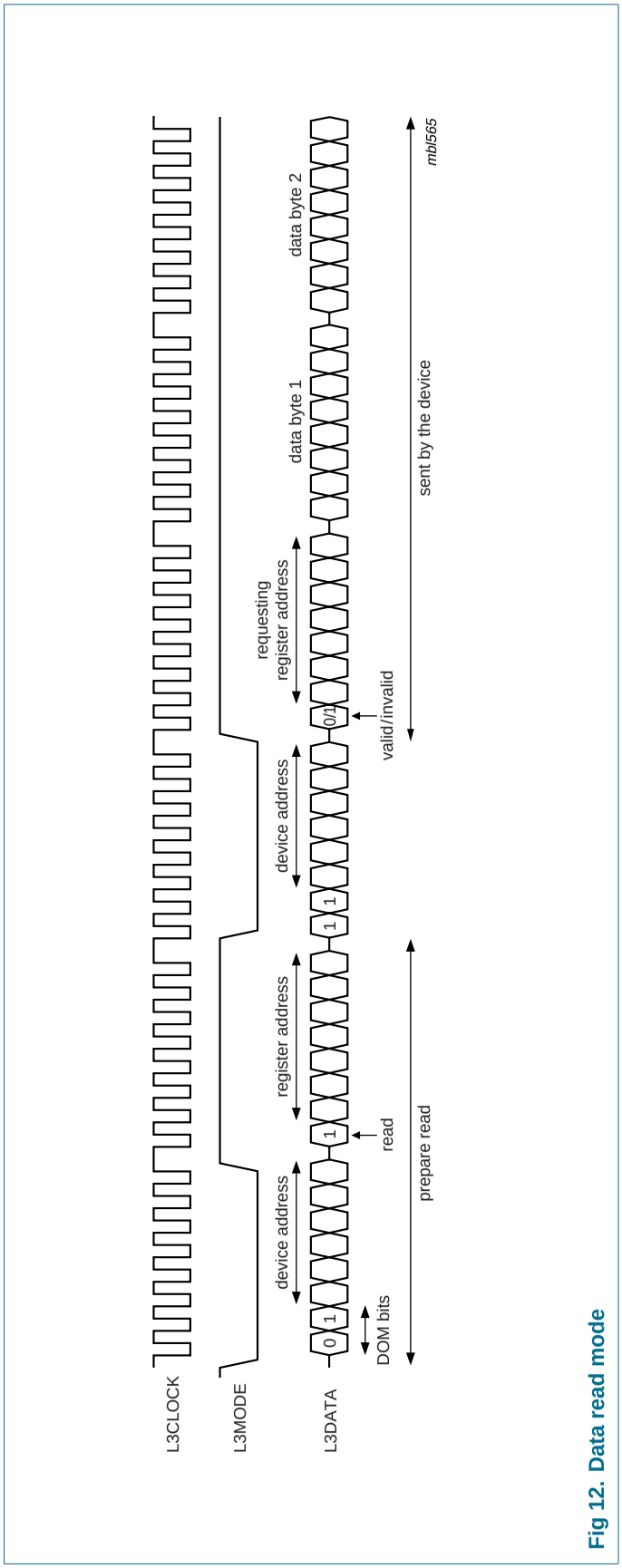

Fig 12. Data read mode

© Koninklijke Philips Electronics N.V. 2005. All rights reserved.

9.4 Data write mode

The data write mode is explained in the signal diagram of Figure 11. For writing data to a device, 4 bytes must be sent (see Table 14):

1. Byte 1 starting with ‘01’ for signalling the write action to the device, followed by the device address ‘01 0100’
2. Byte 2 starting with a ‘0’ for signalling the write action, followed by 7 bits indicating the destination address in binary format with bit A6 being the MSB and bit A0 being the LSB
3. Byte 3 with bit D15 being the MSB
4. Byte 4 with bit D0 being the LSB

It should be noted that each time a new destination register address needs to be written, the device address must be sent again.

Table 14: L3-bus write data

Byte	L3-bus mode	Action	First in time						Latest in time	
			Bit 0	Bit 1	Bit 2	Bit 3	Bit 4	Bit 5	Bit 6	Bit 7
1	address	device address	0	1	0	1	0	1	0	0
2	data transfer	register address	0	A6	A5	A4	A3	A2	A1	A0
3	data transfer	data byte 1	D15	D14	D13	D12	D11	D10	D9	D8
4	data transfer	data byte 2	D7	D6	D5	D4	D3	D2	D1	D0

9.5 Data read mode

To read data from the device, a prepare read must first be done and then data read. The data read mode is explained in the signal diagram of Figure 12.

For reading data from a device, the following 6 bytes are involved (see Table 15):

1. Byte 1 with the device address, including ‘01’ for signalling the write action to the device.
2. Byte 2 is sent with the register address from which data needs to be read. This byte starts with a ‘1’, which indicates that there will be a read action from the register, followed by 7 bits for the destination address in binary format, with bit A6 being the MSB and bit A0 being the LSB.
3. Byte 3 with the device address, including ‘11’ is sent to the device. The ‘11’ indicates that the device must write data to the microcontroller.
4. Byte 4 sent by the device to the bus, with the (requested) register address and a flag bit indicating whether the requested register was valid (bit is logic 0) or invalid (bit is logic 1).
5. Byte 5 sent by the device to the bus, with the data information in binary format, with bit D15 being the MSB.
6. Byte 6 sent by the device to the bus, with the data information in binary format, with bit D0 being the LSB.

© Koninklijke Philips Electronics N.V. 2005. All rights reserved.

Table 15: L3-bus read data

Byte	L3-bus mode	Action	First in time					Latest in time		
			Bit 0	Bit 1	Bit 2	Bit 3	Bit 4	Bit 5	Bit 6	Bit 7
1	address	device address	0	1	0	1	0	1	0	0
2	data transfer	register address	1	A6	A5	A4	A3	A2	A1	A0
3	address	device address	1	1	0	1	0	1	0	0
4	data transfer	register address	0 or 1	A6	A5	A4	A3	A2	A1	A0
5	data transfer	data byte 1	D15	D14	D13	D12	D11	D10	D9	D8
6	data transfer	data byte 2	D7	D6	D5	D4	D3	D2	D1	D0

10. I²C-bus interface

10.1 General

The UDA1384 has an I²C-bus microcontroller interface. All the features are accessible with the I²C-bus interface protocol. In the I²C-bus mode, the DAC mute function is accessible via pin MCMODE with signal QMUTE.

The exchange of data and control information between the microcontroller and the UDA1384 is accomplished through a serial hardware interface comprising the following pins as shown in Table 11:

- MCCLK: clock line with signal SCL
- MCDATA: data line with signal SDA

10.2 Characteristics of the I²C-bus

The bus is for 2-way, 2-line communication between different ICs or modules. The two lines are a serial data line (SDA) and a serial clock line (SCL). Both lines must be connected to the supply voltage V_{DD} via a pull-up resistor when connected to the output stages of a microcontroller. For a 400 kHz IC, the recommendation for this type of bus from Philips Semiconductors must be followed (e.g. up to loads of 200 pF on the bus a pull-up resistor can be used, between 200 pF and 400 pF a current source or switched resistor must be used). Data transfer can only be initiated when the bus is not busy.

10.3 Bit transfer

One data bit is transferred during each clock pulse (see Figure 13). The data on the SDA line must remain stable during the HIGH period of the clock pulse as changes in the data line at this time will be interpreted as control signals. The maximum clock frequency is 400 kHz.

To be able to run on this high frequency, all the inputs and outputs connected to this bus must be designed for this high-speed I²C-bus according to the Philips specification.

© Koninklijke Philips Electronics N.V. 2005. All rights reserved.

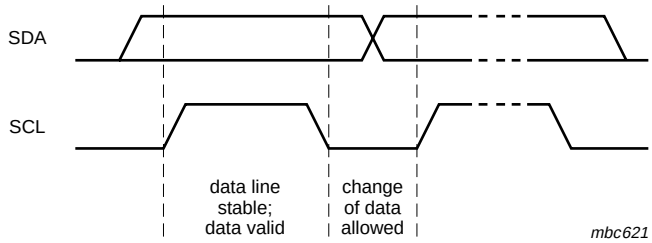

Fig 13. Bit transfer on the I²C-bus

10.4 Byte transfer

Each byte (8 bits) is transferred with the MSB first (see Table 16).

Table 16: Byte transfer

Bit number							
MSB							LSB
7	6	5	4	3	2	1	0

10.5 Data transfer

A device generating a message is a transmitter; a device receiving a message is the receiver. The device that controls the message is the master and the devices which are controlled by the master are the slaves.

10.6 Start and stop conditions

Both data and clock line will remain HIGH when the bus is not busy. A HIGH-to-LOW transition of the data line, while the clock is HIGH, is defined as a start condition (S); see Figure 14. A LOW-to-HIGH transition of the data line while the clock is HIGH is defined as a stop condition (P).

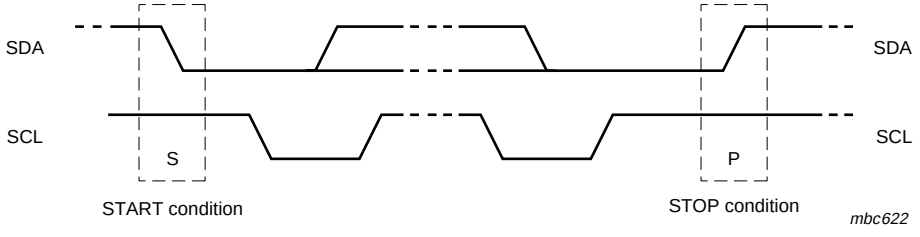

Fig 14. START and STOP conditions on the I²C-bus

10.7 Acknowledgment

The number of data bits transferred between the start and stop conditions from the transmitter to receiver is not limited. Each byte of eight bits is followed by one acknowledge bit (see Figure 15). At the acknowledge bit the data line is released by the master and the master generates an extra acknowledge related clock pulse.

© Koninklijke Philips Electronics N.V. 2005. All rights reserved.

A slave receiver which is addressed, must generate an acknowledge after the reception of each byte. Also a master must generate an acknowledge after the reception of each byte that has been clocked out of the slave transmitter.

The device that acknowledges has to pull down the SDA line during the acknowledge clock pulse, so the SDA line is stable LOW during the HIGH period of the acknowledge related clock pulse. Set-up and hold times must be taken into account. A master receiver must signal an end of data to the transmitter by not generating an acknowledge on the last byte that has been clocked out of the slave. In this event, the transmitter must leave the data line HIGH to enable the master to generate a stop condition.

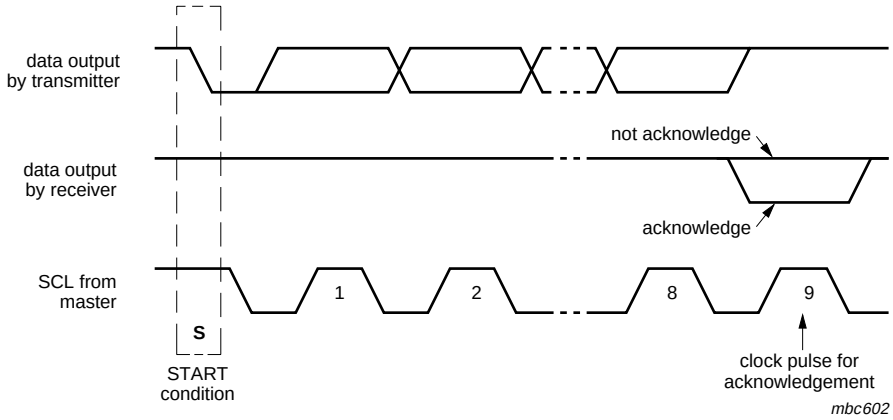

Fig 15. Acknowledge on the I²C-bus

10.8 Device address

Before any data is transmitted on the I²C-bus, the device which should respond is addressed first. The addressing is always done with byte 1 transmitted after the start procedure. The UDA1384 acts as a slave receiver or a slave transmitter.

Therefore, the clock signal SCL is only an input signal. The data signal SDA is a bidirectional line. The UDA1384 device address is shown in Table 17.

Table 17: I²C-bus device address of UDA1384

Device address							R/$\overline{W}$
A6	A5	A4	A3	A2	A1	A0	
0	0	1	1	0	0	0	0/1

10.9 Register address

The register addresses in the I²C-bus mode are the same as in the L3-bus mode. The register addresses are defined in Section 11.

10.10 Write and read data

The I²C-bus configurations for a write and read cycle are shown in Table 18 and Table 19, respectively.

© Koninklijke Philips Electronics N.V. 2005. All rights reserved.

The write cycle is used to write groups of two bytes to the internal registers for the settings. It is also possible to read the registers for the device status information.

10.11 Write cycle

The I²C-bus configuration for a write cycle is shown in Table 18. The write cycle is used to write the data to the internal registers. The device and register addresses are one byte each, the setting data is always a pair of two bytes.

The format of the write cycle is as follows:

1. The microcontroller starts with a start condition (S).
2. The first byte (8 bits) contains the device address '0011 000' and a logic 0 (write) for the R/$\overline{W}$ bit.
3. This is followed by an acknowledge (A) from the UDA1384.
4. After this the microcontroller writes the 8-bit register address (ADDR) where the writing of the register content of the UDA1384 must start.
5. The UDA1384 acknowledges this register address (A).
6. The microcontroller sends 2 bytes data with the Most Significant (MS) byte first and then the Least Significant (LS) byte. After each byte an acknowledge is followed from the UDA1384.
7. If repeated groups of 2 bytes data are transmitted, then the register address is auto incremented. After each byte an acknowledge is followed from the UDA1384.
8. Finally, the UDA1384 frees the I²C-bus and the microcontroller can generate a stop condition (P).

Table 18: Master transmitter writes to UDA1384 registers in the I²C-bus mode

	Device address	R/$\overline{W}$		Register address		Data 1				Data 2 [1]				Data n [1]				
S	0011 000	0	A	ADDR	A	MS1	A	LS1	A	MS2	A	LS2	A	MSn	A	LSn	A	P
	A = acknowledge from UDA1384																	

[1] Auto increment of register address.

10.12 Read cycle

The read cycle is used to read the data values from the internal registers. The I²C-bus configuration for a read cycle is shown in Table 19.

The format of the read cycle is as follows:

1. The microcontroller starts with a start condition (S).
2. The first byte (8 bits) contains the device address '0011 000' and a logic 0 (write) for the R/$\overline{W}$ bit.
3. This is followed by an acknowledge (A) from the UDA1384.
4. After this the microcontroller writes the 8-bit register address (ADDR) where the reading of the register content of the UDA1384 must start.
5. The UDA1384 acknowledges this register address.
6. Then the microcontroller generates a repeated start (Sr).

© Koninklijke Philips Electronics N.V. 2005. All rights reserved.

7. Then the microcontroller generates the device address '0011 000' again, but this time followed by a logic 1 (read) of the R/$\overline{W}$ bit. An acknowledge is followed from the UDA1384.
8. The UDA1384 sends 2 bytes data with the Most Significant (MS) byte first and then the Least Significant (LS) byte. After each byte an acknowledge is followed from the microcontroller (master).
9. If repeated groups of 2 bytes are transmitted, then the register address is auto incremented. After each byte an acknowledge is followed from the microcontroller.
10. The microcontroller stops this cycle by generating a Negative Acknowledge (NA).
11. Finally, the UDA1384 frees the I^{2}C-bus and the microcontroller can generate a stop condition (P).

Table 19: Master transmitter reads from the UDA1384 registers in the I^{2}C-bus mode

	Device address	R/$\overline{W}$		Register address			Device address	R/$\overline{W}$		Data 1				Data 2 [1]				Data n [1]				
S	0011 000	0	A	ADDR	A	Sr	0011 000	1	A	MS1	A	LS1	A	MS2	A	LS2	A	MSn	A	LSn	NA	P
	A = acknowledge from UDA1384									A = acknowledge from master												

[1] Auto increment of register address.

11. Register mapping

In this chapter the register addressing and mapping of the microcontroller interface of the UDA1384 is given.

In Table 20 an overview of the register mapping is given.

In Table 21 the actual register mapping is given and the register definitions are explained in Section 11.3 to Section 11.14.

11.1 Address mapping

Table 20: Overview of register mapping

Address	Function
System settings	
00h	system
01h	audio ADC and DAC subsystem
02h	voice ADC system
Status (read out registers)	
0Fh	status outputs
Interpolator settings	
10h	DAC channel and feature selection
11h	DAC feature control
12h	DAC channel 1
13h	DAC channel 2
14h	DAC channel 3
15h	DAC channel 4

© Koninklijke Philips Electronics N.V. 2005. All rights reserved.

Table 20: Overview of register mapping *…continued*

Address	Function
16h	DAC channel 5
17h	DAC channel 6
18h	DAC mixing channel 1
19h	DAC mixing channel 2
1Ah	DAC mixing channel 3
1Bh	DAC mixing channel 4
1Ch	DAC mixing channel 5
1Dh	DAC mixing channel 6
ADC input amplifier gain settings	
20h	audio ADC input amplifier gain
21h	voice ADC input amplifier gain
Supplemental settings	
30h	supplemental settings 1
31h	supplemental settings 2

© Koninklijke Philips Electronics N.V. 2005. All rights reserved.

11.2 Register mapping

Table 21: UDA1384 register mapping [1]

Add	Function	D15	D14	D13	D12	D11	D10	D9	D8	D7	D6	D5	D4	D3	D2	D1	D0
System settings																	
00h	system	RST [2]	VFS1	VFS0	VCE	VAP	DSD	SC1	SC0	OP1	OP0	FS1	FS0	ACE	ADP	DCE	DAP
		-	0	0	1	0	0	0	0	0	0	0	1	1	0	1	0
01h	audio ADC and DAC subsystem	DC	PAB	PAA	MTB	MTA	AIF2	AIF1	AIF0	DAG	FIL	DVD	DIS1	DIS0	DIF2	DIF1	DIF0
		1	0	0	0	0	0	0	0	0	0	0	0	0	0	0	0
02h	voice ADC system	-	-	-	-	-	-	-	-	BCK1	BCK0	WSM	VH1	VH0	PVA	MTV	VIF
		0	0	0	0	0	0	0	0	0	1	1	0	1	0	0	0
Status (read out only)																	
0Fh	status outputs	-	-	-	-	-	-	-	-	-	-	VS	AS1	AS0	DS2	DS1	DS0
Interpolator settings																	
10h	DAC channel and feature selection	MIX1	MIX0	MC5	MC4	MC3	MC2	MC1	MC0	SEL1	SEL0	CS5	CS4	CS3	CS2	CS1	CS0
		0	0	0	0	0	0	0	0	0	0	0	0	0	0	0	0
11h	DAC feature control	ICS1	ICS0	DE2	DE1	DE0	PD	MT	QM	VC7	VC6	VC5	VC4	VC3	VC2	VC1	VC0
		0	0	0	0	0	0	0	0	0	0	0	0	0	0	0	0
12h	DAC channel 1	ICS1	ICS0	DE2	DE1	DE0	PD	MT	QM	VC7	VC6	VC5	VC4	VC3	VC2	VC1	VC0
		0	0	0	0	0	0	0	0	0	0	0	0	0	0	0	0
13h	DAC channel 2	-	-	DE2	DE1	DE0	PD	MT	QM	VC7	VC6	VC5	VC4	VC3	VC2	VC1	VC0
		0	0	0	0	0	0	0	0	0	0	0	0	0	0	0	0
14h	DAC channel 3	ICS1	ICS0	DE2	DE1	DE0	PD	MT	QM	VC7	VC6	VC5	VC4	VC3	VC2	VC1	VC0
		0	0	0	0	0	0	0	0	0	0	0	0	0	0	0	0
15h	DAC channel 4	-	-	DE2	DE1	DE0	PD	MT	QM	VC7	VC6	VC5	VC4	VC3	VC2	VC1	VC0
		0	0	0	0	0	0	0	0	0	0	0	0	0	0	0	0
16h	DAC channel 5	ICS1	ICS0	DE2	DE1	DE0	PD	MT	QM	VC7	VC6	VC5	VC4	VC3	VC2	VC1	VC0
		0	0	0	0	0	0	0	0	0	0	0	0	0	0	0	0
17h	DAC channel 6	-	-	DE2	DE1	DE0	PD	MT	QM	VC7	VC6	VC5	VC4	VC3	VC2	VC1	VC0
		0	0	0	0	0	0	0	0	0	0	0	0	0	0	0	0
18h	DAC mixing channel 1	ICS1	ICS0	-	-	-	PD	MT	QM	VC7	VC6	VC5	VC4	VC3	VC2	VC1	VC0
		0	0	0	0	0	0	0	0	0	0	0	0	0	0	0	0

© Koninklijke Philips Electronics N.V. 2005. All rights reserved.

Table 21: UDA1384 register mapping [1] *…continued*

Add	Function	D15	D14	D13	D12	D11	D10	D9	D8	D7	D6	D5	D4	D3	D2	D1	D0
19h	DAC mixing channel 2	-	-	-	-	-	PD	MT	QM	VC7	VC6	VC5	VC4	VC3	VC2	VC1	VC0
		0	0	0	0	0	0	0	0	0	0	0	0	0	0	0	0
1Ah	DAC mixing channel 3	ICS1	ICS0	-	-	-	PD	MT	QM	VC7	VC6	VC5	VC4	VC3	VC2	VC1	VC0
		0	0	0	0	0	0	0	0	0	0	0	0	0	0	0	0
1Bh	DAC mixing channel 4	-	-	-	-	-	PD	MT	QM	VC7	VC6	VC5	VC4	VC3	VC2	VC1	VC0
		0	0	0	0	0	0	0	0	0	0	0	0	0	0	0	0
1Ch	DAC mixing channel 5	ICS1	ICS0	-	-	-	PD	MT	QM	VC7	VC6	VC5	VC4	VC3	VC2	VC1	VC0
		0	0	0	0	0	0	0	0	0	0	0	0	0	0	0	0
1Dh	DAC mixing channel 6	-	-	-	-	-	PD	MT	QM	VC7	VC6	VC5	VC4	VC3	VC2	VC1	VC0
		0	0	0	0	0	0	0	0	0	0	0	0	0	0	0	0
ADC input amplifier gain settings																	
20h	ADC 1 and ADC 2 input amplifier gain	-	-	-	-	IB3	IB2	IB1	IB0	-	-	-	-	IA3	IA2	IA1	IA0
		0	0	0	0	0	0	0	0	0	0	0	0	0	0	0	0
21h	voice ADC input amplifier gain	-	-	-	-	-	-	-	-	-	-	-	IV4	IV3	IV2	IV1	IV0
		-	-	-	-	-	-	-	-	0	0	0	0	0	0	0	0
Supplemental settings																	
30h	supplemental settings 1	-	-	-	-	-	-	-	-	PDT	-	-	-	-	-	-	-
		0	0	0	0	0	0	0	0	0	0	0	0	0	0	0	0
31h	supplemental settings 2	-	-	-	-	-	-	-	-	-	DITH2	DITH1	DITH0	-	-	VMTP	PDLNA
		0	0	0	0	0	0	0	0	0	0	0	0	0	0	0	0

[1] When writing new settings via the L3-bus interface, the default values should always be set to warrant correct operation. Read access to the DAC features register 11h will not return valid data.

[2] When bit RST is set to logic 1, the default values are set to all the registers as shown in Table 21. When start-up, all the registers in 00h are initialized as the default values and the mute control bits MTA, MTB, MTV, MT and QM are set to logic 1. All other registers have non fixed values.

© Koninklijke Philips Electronics N.V. 2005. All rights reserved.

11.3 System settings

Table 22: System register (address 00h) bit allocation

Bit	15	14	13	12	11	10	9	8
Symbol	RST	VFS1	VFS0	VCE	VAP	DSD	SC1	SC0
Reset	-	0	0	1	0	0	0	0
Access	read and write							
Bit	**7**	**6**	**5**	**4**	**3**	**2**	**1**	**0**
Symbol	OP1	OP0	FS1	FS0	ACE	ADP	DCE	DAP
Reset	0	0	0	1	1	0	1	0
Access	read and write							

Table 23: Description of system register bits

Bit	Symbol	Description
15	RST	**Reset.** Bit RST initializes the L3-bus registers with the default settings.
		1 = Reset to default settings
		0 = No reset
14 to 13	VFS[1:0]	**Voice ADC sampling frequency.** A 2-bit value to select the voice ADC sampling frequency. Default 00. See Table 24.
12	VCE	**Voice ADC clock enable.**
		1 = clock enabled (default)
		0 = clock disabled
11	VAP	**Voice ADC power control**. Bit VAP is to reduce the power consumption of the voice ADC.
		1 = state is power-on
		0 = state is power-off (default)
10	DSD	**DSD mode selection.** Bit DSD selects the DSD mode.
		1 = DSD mode
		0 = normal mode (default)
9 to 8	SC[1:0]	**System clock frequency.** A 2-bit value to select the used external clock frequency. 128f_s system clock for the DAC can be used by setting bit DVD = 1. Default 00. See Table 25.
7 to 6	OP[1:0]	**Operating mode selection.** A 2-bit value to select the operation mode of the audio ADC and DAC. Default 00. See Table 26.
5 to 4	FS[1:0]	**Sampling frequency.** A 2-bit value to select the sampling frequency of the audio ADC and DAC in the WS mode. Default 01. See Table 27.
3	ACE	**ADC clock enable.** Bit ACE enables the audio ADC clock
		1 = clock enabled (default)
		0 = clock disabled
2	ADP	**ADC power control**. Bit ADP is to reduce the power consumption of the audio ADC.
		1 = state is power-on
		0 = state is power-off (default)

© Koninklijke Philips Electronics N.V. 2005. All rights reserved.

Table 23: Description of system register bits *…continued*

Bit	Symbol	Description
1	DCE	**DAC clock enable.** Bit DCE enables the DAC clock.
		1 = clock enabled (default)
		0 = clock disabled
0	DAP	**DAC power control**. Bit DAP is to reduce the power consumption of the DAC.
		1 = state is power-on
		0 = state is power-off (default)

Table 24: Voice ADC sampling frequency bits

VFS1	VFS0	Function
0	0	6.25 kHz to 12.5 kHz (default)
0	1	12.5 kHz to 25 kHz
1	0	25 kHz to 50 kHz
1	1	reserved

Table 25: System clock frequency bits

SC1	SC0	ADC	DAC		Remark
			Bit DVD = 0	Bit DVD = 1	
0	0	$256f_s$	$256f_s$	$128f_s$	default
0	1	$384f_s$	$384f_s$	$192f_s$	
1	0	$512f_s$	$512f_s$	$256f_s$	
1	1	$768f_s$	$768f_s$	$384f_s$	

Table 26: Operating mode bits

OP1	OP0	ADC mode	DAC mode	Remark
0	0	SYSCLK ($256f_s$, $384f_s$, $512f_s$ or $768f_s$)	SYSCLK ($128f_s$, $256f_s$, $384f_s$, $512f_s$ or $768f_s$)	default
0	1	SYSCLK ($256f_s$, $384f_s$, $512f_s$ or $768f_s$)	WSDA ($1f_s$)	
1	0	WSAD ($1f_s$)	SYSCLK ($128f_s$, $256f_s$, $384f_s$, $512f_s$ or $768f_s$)	
1	1	WSDA ($1f_s$)	WSDA ($1f_s$)	

Table 27: Audio ADC and DAC sampling frequency bits

FS1	FS0	Function
0	0	12.5 kHz to 25 kHz
0	1	25 kHz to 50 kHz (default)
1	0	50 kHz to 100 kHz
1	1	100 kHz to 200 kHz

© Koninklijke Philips Electronics N.V. 2005. All rights reserved.

11.4 Audio ADC and DAC subsystem settings

Table 28: Audio ADC and DAC subsystem register (address 01h) bit allocation

Bit	15	14	13	12	11	10	9	8
Symbol	DC	PAB	PAA	MTB	MTA	AIF2	AIF1	AIF0
Reset	1	0	0	0	0	0	0	0
Access	read and write							
Bit	**7**	**6**	**5**	**4**	**3**	**2**	**1**	**0**
Symbol	DAG	FIL	DVD	DIS1	DIS0	DIF2	DIF1	DIF0
Reset	0	0	0	0	0	0	0	0
Access	read and write							

Table 29: Description of the audio ADC and DAC subsystem register bit

Bit	Symbol	Description
15	DC	**ADC DC-filter.** Bit DC enables the digital DC-filter of the ADC.
		1 = DC-filtering is active (default)
		0 = no DC-filtering
14	PAB	**Polarity ADC 2 control.** Bit PAB controls the ADC 2 polarity.
		1 = polarity is inverted
		0 = polarity is not-inverted (default)
13	PAA	**Polarity ADC 1 control.** Bit PAA controls the ADC 1 polarity.
		1 = polarity is inverted
		0 = polarity is not-inverted (default)
12	MTB	**Mute ADC 2.** Bit MTB enables the digital mute of ADC 2.
		1 = ADC 2 is soft muted
		0 = ADC 2 is not muted (default)
11	MTA	**Mute ADC 1.** Bit MTA enables the digital mute of ADC 1.
		1 = ADC 1 is soft muted
		0 = ADC 1 is not muted (default)
10 to 8	AIF[2:0]	**ADC output data interface format.** A 3-bit value to select the used data format to the I^2S-bus ADC output interface. Default 000. See Table 30.
7	DAG	**DAC gain switch.** Bit DAG selects the DAC gain.
		1 = gain = 6 dB
		0 = gain = 0 dB (default)
6	FIL	**Filter selection.** Bit FIL selects the interpolation filter characteristics.
		1 = slow roll-off
		0 = sharp roll-off (default)
5	DVD	**192 kHz sampling mode selection.** Bit DVD selects the oversampling rate of the noise shaper.
		1 = $64f_s$ rate; used for 192 kHz and 176.4 kHz sampling frequencies
		0 = $128f_s$ rate (default)
4 to 3	DIS[1:0]	**Data interface selection.** A 2-bit value to select the data interface connection. Default 00. See Table 31.
2 to 0	DIF[2:0]	**DAC input data interface format.** A 3-bit value to select the used data format to the I^2S-bus DAC input interface. Default 000. See Table 30.

© Koninklijke Philips Electronics N.V. 2005. All rights reserved.

Table 30: Data interface format bits

AIF2	AIF1	AIF0	Function
DIF2	DIF1	DIF0	
0	0	0	I^2S-bus format (default)
0	0	1	LSB-justified format, 16 bits
0	1	0	LSB-justified format, 20 bits
0	1	1	LSB-justified format, 24 bits
1	0	0	MSB-justified format
1	0	1	multichannel format, 20 bits
1	1	0	multichannel format, 24 bits (format 1)
1	1	1	multichannel format, 24 bits (format 2)

Table 31: Data interface selection bits

DIS1	DIS0	Input to DAC
0	0	DATADA1 to DAC channel 1 and 2, DATADA2 to DAC channel 3 and 4, and DATADA3 to DAC channel 5 and 6 (default)
0	1	DATADA1 to DAC channels 1 to 6
1	0	DATADA2 to DAC channels 1 to 6
1	1	DATADA3 to DAC channels 1 to 6

11.5 Voice ADC system settings

Table 32: Voice ADC system register (address 02h) bit allocation

Bit	15	14	13	12	11	10	9	8
Symbol	-	-	-	-	-	-	-	-
Reset	-	-	-	-	-	-	-	-
Access	read and write							
Bit	**7**	**6**	**5**	**4**	**3**	**2**	**1**	**0**
Symbol	BCK1	BCK0	WSM	VH1	VH0	PVA	MTV	VIF
Reset	0	1	1	0	1	0	0	0
Access	read and write							

Table 33: Description of the voice ADC system register bits

Bit	Symbol	Description
15 to 8	-	default 0000 0000
7 to 6	BCK[1:0]	**BCK frequency of voice ADC.** A 2-bit value to select the BCK frequency of the voice ADC in the WSV-out mode. Default 01. See Table 34.
5	WSM	**WSV mode selection.** Bit WSM selects the WSV mode of the voice ADC
		1 = WSV-in mode (default)
		0 = WSV-out mode
4 to 3	VH[1:0]	**Voice ADC high-pass filter setting.** A 2-bit value to enable the high-pass filter of the voice ADC. Default 01. See Table 35.

© Koninklijke Philips Electronics N.V. 2005. All rights reserved.

Table 33: Description of the voice ADC system register bits *…continued*

Bit	Symbol	Description
2	PVA	**Polarity voice ADC control.** Bit PVA controls the voice ADC polarity.
		1 = polarity is inverted
		0 = polarity is not-inverted (default)
1	MTV	**Mute voice ADC.** Bit MTV enables the digital mute of the voice ADC.
		1 = ADC 1 is soft muted
		0 = ADC 1 is not muted (default)
0	VIF	**Voice ADC interface format.** Bit VIF selects the data interface format of the voice ADC.
		1 = mono-channel format
		0 = I^2S-bus format (default)

Table 34: BCK frequency of voice ADC bits

BCK1	BCK0	Function
0	0	$32f_s$
0	1	$64f_s$ (default)
1	0	$128f_s$
1	1	$256f_s$

Table 35: Voice ADC high-pass filter setting bits

VH1	VH0	Function
0	0	high-pass filter off
0	1	$f_c = 0.00008f_s$ (default)
1	0	$f_c = 0.0125f_s$
1	1	$f_c = 0.025f_s$

© Koninklijke Philips Electronics N.V. 2005. All rights reserved.

11.6 Status output register

Table 36: Status output register (address 0Fh) bit allocation

Bit	15	14	13	12	11	10	9	8
Symbol	-	-	-	-	-	-	-	-
Reset	-	-	-	-	-	-	-	-
Access	read only							
Bit	**7**	**6**	**5**	**4**	**3**	**2**	**1**	**0**
Symbol	-	-	VS	AS1	AS0	DS2	DS1	DS0
Reset	-	-	-	-	-	-	-	-
Access	read only							

Table 37: Description of status output register bits

Bit	Symbol	Description
15 to 6	-	not used
5	VS	**Voice ADC status.** Bit VS indicates the hard mute status of the voice ADC.
		1 = power-down is ready and the clock may be disabled
		0 = power-down is not ready and the clock should not be disabled
4	AS1	**ADC 2 status.** Bit AS1 indicates the hard mute status of ADC 2.
		1 = power-down is ready and the clock may be disabled
		0 = power-down is not ready and the clock should not be disabled
3	AS0	**ADC 1 status.** Bit AS0 indicates the hard mute status of ADC 1.
		1 = power-down is ready and the clock may be disabled
		0 = power-down is not ready and the clock should not be disabled
2	DS2	**DAC channel 5 and 6 status.** Bit DS2 indicates the hard mute status of DAC channel 5 and 6.
		1 = power-down is ready and the clock may be disabled
		0 = power-down is not ready and the clock should not be disabled
1	DS1	**DAC channel 3 and 4 status.** Bit DS1 indicates the hard mute status of DAC channel 3 and 4.
		1 = power-down is ready and the clock may be disabled
		0 = power-down is not ready and the clock should not be disabled
0	DS0	**DAC channel 1 and 2 status.** Bit DS0 indicates the hard mute status of DAC channel 1 and 2.
		1 = power-down is ready and the clock may be disabled
		0 = power-down is not ready and the clock should not be disabled

© Koninklijke Philips Electronics N.V. 2005. All rights reserved.

11.7 DAC channel selection

Table 38: DAC channel select register (address 10h) bit allocation

Bit	15	14	13	12	11	10	9	8
Symbol	MIX1	MIX0	MC5	MC4	MC3	MC2	MC1	MC0
Reset	0	0	0	0	0	0	0	0
Access	read and write							
Bit	**7**	**6**	**5**	**4**	**3**	**2**	**1**	**0**
Symbol	SEL1	SEL0	CS5	CS4	CS3	CS2	CS1	CS0
Reset	0	0	0	0	0	0	0	0
Access	read and write							

Table 39: Description of DAC channel select register bits

Bit	Symbol	Description
15 to 14	MIX[1:0]	**DAC mixer setting.** A 2-bit value to enable the DAC mixer. Default 00. See Table 40.
13 to 8	MC[5:0]	**DAC mixing channel selection.** A group of 6 enable bits to make DAC mixing channels ready for receiving feature settings through register address 11h. Only selected registers accept new settings. Default 00 0000 (no channel ready). See Table 41.
7 and 6	SEL[1:0]	**Feature selection.** A 2-bit value to select the features to be set through register address 11h. When the feature settings are written, only selected feature settings are changed and non selected features are kept unchanged. Default 00. See Table 42.
5 to 0	CS[5:0]	**DAC channel selection.** A group of 6 enable bits to make DAC channel ready for receiving feature settings through register address 11h. Default 00 0000 (no channel ready). See Table 41.

Table 40: DAC mixer setting bits

MIX1	MIX0	Function
0	0	no mixing (default)
0	1	no mixing
1	0	mixing ADC 1
1	1	mixing ADC 2

Table 41: DAC channel and mixing channel selection bits

MC5	MC4	MC3	MC2	MC1	MC0	Function
CS5	CS4	CS3	CS2	CS1	CS0	
0	0	0	0	0	0	no channel ready (default)
0	0	0	0	0	1	channel 1 selected
:	:	:	:	:	:	
0	0	1	0	1	0	channel 2 and channel 4 selected
:	:	:	:	:	:	
1	1	1	1	1	1	all channels selected

© Koninklijke Philips Electronics N.V. 2005. All rights reserved.

Table 42: Feature selection bits

SEL1	SEL0	Function
0	0	all features (default)
0	1	volume
1	0	mute and quick mute
1	1	de-emphasis, polarity and input channel selection

11.8 DAC features settings

Table 43: DAC features register (address 11h) bit allocation

Bit	15	14	13	12	11	10	9	8
Symbol	ICS1	ICS0	DE2	DE1	DE0	PD	MT	QM
Reset	0	0	0	0	0	0	0	0
Access	read and write							
Bit	**7**	**6**	**5**	**4**	**3**	**2**	**1**	**0**
Symbol	VC7	VC6	VC5	VC4	VC3	VC2	VC1	VC0
Reset	0	0	0	0	0	0	0	0
Access	read and write							

Table 44: Description of DAC features register bits

Bit	Symbol	Description
15 to 14	ICS[1:0]	**Input channel selection.** A 2-bit value to select the input channels. As the controlled channels are paired off, this 2-bit value must be written to each odd channel register. Default 00. See Table 45.
13 to 11	DE[2:0]	**De-emphasis setting.** A 3-bit value to enable the digital de-emphasis filter. Default 000. See Table 46.
10	PD	**Polarity DAC control.** Bit PD controls the DAC polarity.
		1 = polarity is inverted
		0 = polarity is not-inverted (default)
9	MT	**Muting.** Bit MT enables the digital mute. All the DAC outputs are muted at start-up. It is necessary to explicitly switch off for the audio output by means of bit MT.
		1 = muting (start-up)
		0 = no muting (default)
8	QM	**Quick mute.** Bit QM sets the quick mute mode.
		1 = quick mute mode
		0 = soft mute mode (default)
7 to 0	VC[7:0]	**Interpolator volume control.** An 8-bit value to program the volume attenuation of each channel. The range is from 0 dB to –53 dB in steps of 0.25 dB, from –53 dB to –80 dB in steps of 3 dB and –∞ dB. Default 0000 0000. See Table 47.

© Koninklijke Philips Electronics N.V. 2005. All rights reserved.

Table 45: Input channel selection bits

ICS1	ICS0	Input to DAC output
0	0	left channel input data to odd channel output; right channel input data to even channel output
0	1	left channel input data to odd and even channel outputs
1	0	right channel input data to odd and even channel outputs
1	1	left channel input data to even channel output; right channel input data to odd channel output

Table 46: De-emphasis bits

DE2	DE1	DE0	Function
0	0	0	no de-emphasis (default)
0	0	1	de-emphasis of 32 kHz
0	1	0	de-emphasis of 44.1 kHz
0	1	1	de-emphasis of 48 kHz
1	0	0	de-emphasis of 96 kHz
1	0	1	not used
1	1	0	not used
1	1	1	not used

Table 47: Interpolator volume control bits

VC7	VC6	VC5	VC4	VC3	VC2	VC1	VC0	Volume (dB)
0	0	0	0	0	0	0	0	0 (default)
0	0	0	0	0	0	0	1	–0.25
0	0	0	0	0	0	1	0	–0.50
0	0	0	0	0	0	1	1	–0.75
0	0	0	0	0	1	0	0	–1.00
0	0	0	0	0	1	0	1	–1.25
:	:	:	:	:	:	:	:	:
1	1	0	1	0	1	0	0	–53
1	1	0	1	1	0	0	0	–56
1	1	0	1	1	1	0	0	–59
1	1	1	0	0	0	0	0	–62
1	1	1	0	0	1	0	0	–65
1	1	1	0	1	0	0	0	–68
1	1	1	0	1	1	0	0	–71
1	1	1	1	0	0	0	0	–74
1	1	1	1	0	1	0	0	–77
1	1	1	1	1	0	0	0	–80
1	1	1	1	1	1	0	0	–∞
:	:	:	:	:	:	:	:	:
1	1	1	1	1	1	1	1	–∞

© Koninklijke Philips Electronics N.V. 2005. All rights reserved.

11.9 DAC channel 1 to channel 6 settings

All the DAC features which are written in register 11h are copied into the odd channel registers.

Table 48: DAC channel 1, 3 and 5 registers (address 12h, 14h and 16h) bit allocation

Bit	15	14	13	12	11	10	9	8
Symbol	ICS1	ICS0	DE2	DE1	DE0	PD	MT	QM
Reset	0	0	0	0	0	0	0	0
Access	read and write							
Bit	**7**	**6**	**5**	**4**	**3**	**2**	**1**	**0**
Symbol	VC7	VC6	VC5	VC4	VC3	VC2	VC1	VC0
Reset	0	0	0	0	0	0	0	0
Access	read and write							

All the DAC features which are written in register 11h are copied into the even channel registers, except the bits ICS[1:0].

Table 49: DAC channel 2, 4 and 6 registers (address 13h, 15h and 17h) bit allocation

Bit	15	14	13	12	11	10	9	8
Symbol	-	-	DE2	DE1	DE0	PD	MT	QM
Reset	0	0	0	0	0	0	0	0
Access	read and write							
Bit	**7**	**6**	**5**	**4**	**3**	**2**	**1**	**0**
Symbol	VC7	VC6	VC5	VC4	VC3	VC2	VC1	VC0
Reset	0	0	0	0	0	0	0	0
Access	read and write							

11.10 DAC mixing channel settings

All the DAC features which are written in register 11h are copied into the odd mixing channel registers, except the bits DE[2:0].

Table 50: DAC mixing channel 1, 3 and 5 registers (address 18h, 1Ah and 1Ch) bit allocation

Bit	15	14	13	12	11	10	9	8
Symbol	ICS1	ICS0	-	-	-	PD	MT	QM
Reset	0	0	0	0	0	0	0	0
Access	read and write							
Bit	**7**	**6**	**5**	**4**	**3**	**2**	**1**	**0**
Symbol	VC7	VC6	VC5	VC4	VC3	VC2	VC1	VC0
Reset	0	0	0	0	0	0	0	0
Access	read and write							

© Koninklijke Philips Electronics N.V. 2005. All rights reserved.

All the DAC features which are written in register 11h are copied into the even channel registers, except the bits ICS[1:0] and DE[2:0].

Table 51: DAC mixing channel 2, 4 and 6 registers (address 19h, 1Bh and 1Dh) bit allocation

Bit	15	14	13	12	11	10	9	8
Symbol	-	-	-	-	-	PD	MT	QM
Reset	0	0	0	0	0	0	0	0
Access	read and write							
Bit	**7**	**6**	**5**	**4**	**3**	**2**	**1**	**0**
Symbol	VC7	VC6	VC5	VC4	VC3	VC2	VC1	VC0
Reset	0	0	0	0	0	0	0	0
Access	read and write							

11.11 Audio ADC 1 and ADC 2 input amplifier gain settings

Table 52: Audio ADC input amplifier gain register (address 20h) bit allocation

Bit	15	14	13	12	11	10	9	8
Symbol	-	-	-	-	IB3	IB2	IB1	IB0
Reset	0	0	0	0	0	0	0	0
Access	read and write							
Bit	**7**	**6**	**5**	**4**	**3**	**2**	**1**	**0**
Symbol	-	-	-	-	IA3	IA2	IA1	IA0
Reset	0	0	0	0	0	0	0	0
Access	read and write							

Table 53: Description of audio ADC input amplifier gain register bits

Bit	Symbol	Description
15 to 12	-	default 0000
11 to 8	IB[3:0]	**Audio ADC 2 input amplifier gain.** A 4-bit value to program the input amplifier gain in steps of 3 dB (9 settings). Default 0000. See Table 54.
7 to 4	-	default 0000
3 to 0	IA[3:0]	**Audio ADC 1 input amplifier gain.** A 4-bit value to program the input amplifier gain in steps of 3 dB (9 settings). Default 0000. See Table 54.

Table 54: Audio ADC input amplifier gain bits

IA3	IA2	IA1	IA0	Gain (dB)
IB3	IB2	IB1	IB0	
0	0	0	0	0 (default)
0	0	0	1	+3
0	0	1	0	+6
0	0	1	1	+9
0	1	0	0	+12
0	1	0	1	+15

© Koninklijke Philips Electronics N.V. 2005. All rights reserved.

Table 54: Audio ADC input amplifier gain bits *...continued*

IA3	IA2	IA1	IA0	Gain (dB)
IB3	IB2	IB1	IB0	
0	1	1	0	+18
0	1	1	1	+21
1	0	0	0	+24

11.12 Voice ADC gain settings

Table 55: Voice ADC input amplifier gain register (address 21h) bit allocation

Bit	15	14	13	12	11	10	9	8
Symbol	-	-	-	-	-	-	-	-
Reset	-	-	-	-	-	-	-	-
Access	read and write							
Bit	**7**	**6**	**5**	**4**	**3**	**2**	**1**	**0**
Symbol	-	-	-	IV4	IV3	IV2	IV1	IV0
Reset	0	0	0	0	0	0	0	0
Access	read and write							

Table 56: Description of voice ADC input amplifier gain register bits

Bit	Symbol	Description
15 to 8	-	not used
7 to 5	-	default 000
4 to 0	IV[4:0]	**Voice ADC input amplifier gain.** A 5-bit value to program the voice amplifier gain in steps of 1.5 dB (21 settings). Default 0 0000. See Table 57.

Table 57: Voice ADC input amplifier gain bits

IV4	IV3	IV2	IV1	IV0	Gain (dB)
0	0	0	0	0	0 (default)
0	0	0	0	1	+1.5
0	0	0	1	0	+3
0	0	0	1	1	+4.5
0	0	1	0	0	+6
0	0	1	0	1	+7.5
:	:	:	:	:	:
1	0	0	1	1	+28.5
1	0	1	0	0	+30
:	:	:	:	:	not used
1	1	1	1	1	not used

© Koninklijke Philips Electronics N.V. 2005. All rights reserved.

11.13 Supplemental settings 1

Table 58: Supplemental settings 1 register (address 30h) bit allocation

Bit	15	14	13	12	11	10	9	8
Symbol	-	-	-	-	-	-	-	-
Reset	0	0	0	0	0	0	0	0
Access	read and write							
Bit	**7**	**6**	**5**	**4**	**3**	**2**	**1**	**0**
Symbol	PDT	-	-	-	-	-	-	-
Reset	0	0	0	0	0	0	0	0
Access	read and write							

Table 59: Description of supplemental settings 1 register bits

Bit	Symbol	Description
15 to 8	-	default 0000 0000
7	PDT	**Power down time.** Bit PDT selects the time of the SDAC power-down sequence.
		1 = 1024/f_s seconds
		0 = 512/f_s seconds (default)
6 to 0	-	default 000 0000

11.14 Supplemental settings 2

Table 60: Supplemental settings 2 register (address 31h) bit allocation

Bit	15	14	13	12	11	10	9	8
Symbol	-	-	-	-	-	-	-	-
Reset	0	0	0	0	0	0	0	0
Access	read and write							
Bit	**7**	**6**	**5**	**4**	**3**	**2**	**1**	**0**
Symbol	-	DITH2	DITH1	DITH0	-	-	VMTP	PDLNA
Reset	0	0	0	0	0	0	0	0
Access	read and write							

Table 61: Description of supplemental settings 2 register bits

Bit	Symbol	Description
15 to 7	-	default 0000 0000 0
6 to 4	DITH[2:0]	**DAC dither control.** A 3-bit value to control the dithering of the SDAC. Default 000. See Table 62.
3 to 2	-	default 00
1	VMTP	**Voice mute period control.** Bit VMPT selects the voice ADC mute period at power-up.
		1 = mute for 1024 samples (1024/f_s)
		0 = mute for 2048 samples (2048/f_s; default)

© Koninklijke Philips Electronics N.V. 2005. All rights reserved.

Table 61: Description of supplemental settings 2 register bits *...continued*

Bit	Symbol	Description
0	PDLNA	**Power-down voice LNA.** Bit PDLNA is to power-down the voice ADC LNA. It should be noted that disabling the LNA requires a recovery time defined by the external RC circuit.
		1 = power-down
		0 = power-on (default)

Table 62: DAC dither control bits

DITH2	DITH1	DITH0	Function
0	0	0	DC dither (mid level); default
0	0	1	reserved
0	1	0	reserved
0	1	1	reserved
1	0	0	DC dither (low level)
1	0	1	DC plus AC dither (low level)
1	1	0	DC dither (high level)
1	1	1	DC plus AC dither (high level)

12. Limiting values

Table 63: Limiting values

In accordance with the Absolute Maximum Rating System (IEC 60134).

Symbol	Parameter	Conditions		Min	Max	Unit
V_{DD}	supply voltage		[1]	-	4.0	V
$T_{xtal(max)}$	maximum crystal temperature			-	150	°C
T_{stg}	storage temperature			–65	+125	°C
T_{amb}	ambient temperature			–20	+85	°C
V_{esd}	electrostatic discharge voltage	HBM	[2]	–2000	+2000	V
		MM	[2]	–200	+200	V

[1] All supply connections must be made to the same power supply.

[2] ESD behavior is tested in accordance with JEDEC II standard:

a) Human Body Model (HBM); equivalent to discharging a 100 pF capacitor through a 1.5 kΩ series resistor.

b) Machine Model (MM); equivalent to discharging a 200 pF capacitor through a 0.75 μH series inductor.

13. Thermal characteristics

Table 64: Thermal characteristics

Symbol	Parameter	Conditions	Typ	Unit
$R_{th(j-a)}$	thermal resistance from junction to ambient	in free air	85	K/W

© Koninklijke Philips Electronics N.V. 2005. All rights reserved.

14. Static characteristics

Table 65: Characteristics

V_{DDD} = $V_{DDA(AD)}$ = $V_{DDA(DA)}$ = 3.3 V; T_{amb} = 25 °C; R_L = 22 kΩ; all voltages referenced to ground (pins V_{SS}); unless otherwise specified.

Symbol	Parameter	Conditions		Min	Typ	Max	Unit
Supplies							
$V_{DDA(AD)}$	ADC analog supply voltage		[1]	2.7	3.3	3.6	V
$V_{DDA(DA)}$	DAC analog supply voltage		[1]	2.7	3.3	3.6	V
V_{DDD}	digital supply voltage		[1]	2.7	3.3	3.6	V
$I_{DDA(AD)}$	ADC analog supply current	f_{ADC} = 48 kHz		-	30	-	mA
		f_{ADC} = 96 kHz		-	31	-	mA
$I_{DDA(DA)}$	DAC analog supply current	f_{DAC} = 48 kHz		-	20	-	mA
		f_{DAC} = 96 kHz		-	32	-	mA
I_{DDD}	digital supply current	f_{ADC} = f_{DAC} = 48 kHz; f_{VOICE} = 48 kHz		-	31	-	mA
		f_{ADC} = f_{DAC} = 96 kHz; f_{VOICE} = 48 kHz		-	55	-	mA
$I_{DDD(pd)}$	digital supply current in Power down-mode	audio and voice ADCs power-down		-	18	-	mA
		DAC power-down		-	14	-	mA
Digital input pins (5 V tolerant TTL compatible)							
V_{IH}	HIGH-level input voltage			2.0	-	-	V
V_{IL}	LOW-level input voltage			-	-	0.8	V
$\|I_{LI}\|$	input leakage current			-	-	1	μA
C_i	input capacitance			-	-	10	pF
Digital output pins							
V_{OH}	HIGH-level output voltage	I_{OH} = −2 mA		$0.85V_{DDD}$	-	-	V
V_{OL}	LOW-level output voltage	I_{OL} = 2 mA		-	-	0.4	V
Analog-to-digital converter							
V_{ref}	reference voltage on pin V_{ref}	with respect to $V_{SSA(AD)}$		$0.45V_{DDA(AD)}$	$0.5V_{DDA(AD)}$	$0.55V_{DDA(AD)}$	V
V_{ADCP}	positive reference voltage of ADC			-	$V_{DDA(AD)}$	-	V
V_{ADCN}	negative reference voltage of ADC			0.0	0.0	0.0	V
R_o	output resistance on pin V_{ref}			-	5	-	kΩ
$R_{i(ADC)}$	input resistance of audio ADC			-	10	-	kΩ

© Koninklijke Philips Electronics N.V. 2005. All rights reserved.

Table 65: Characteristics *...continued*

$V_{DDD} = V_{DDA(AD)} = V_{DDA(DA)} = 3.3$ V; $T_{amb} = 25$ °C; $R_L = 22$ kΩ; all voltages referenced to ground (pins V_{SS}); unless otherwise specified.

Symbol	Parameter	Conditions	Min	Typ	Max	Unit
$R_{i(VADC)}$	input resistance of voice ADC		-	5	-	kΩ
Digital-to-analog converter						
R_L	load resistance		4	-	-	kΩ
R_o	output resistance		-	1	-	kΩ

[1] All supply connections must be made to the same power supply unit.

15. Dynamic characteristics

Table 66: Characteristics

$V_{DDD} = V_{DDA(AD)} = V_{DDA(DA)} = 3.3$ V; $f_i = 1$ kHz; $T_{amb} = 25$ °C; $R_L = 22$ kΩ; sampling frequency $f_s = 48$ kHz; all voltages referenced to ground (pins V_{SS}); unless otherwise specified.

Symbol	Parameter	Conditions		Min	Typ	Max	Unit
Audio analog-to-digital converter							
D_0	digital output level	at 0 dB setting; 900 mV input	[1] [2]	–2.5	–1.2	–0.7	dB
		at 3 dB setting; 637 mV input	[2]	-	–1.2	-	dB
		at 6 dB setting; 451 mV input	[2]	-	–1.2	-	dB
		at 9 dB setting; 319 mV input	[2]	-	–1.2	-	dB
		at 12 dB setting; 226 mV input	[2]	-	–1.2	-	dB
		at 15 dB setting; 160 mV input	[2]	-	–1.2	-	dB
		at 18 dB setting; 113 mV input	[2]	-	–1.2	-	dB
		at 21 dB setting; 80 mV input	[2]	-	–1.2	-	dB
		at 24 dB setting; 57 mV input	[2]	-	–1.2	-	dB
ΔV_i	input voltage unbalance between channels			-	0.1	-	dB

© Koninklijke Philips Electronics N.V. 2005. All rights reserved.

Table 66: Characteristics *...continued*

$V_{DDD} = V_{DDA(AD)} = V_{DDA(DA)} = 3.3$ V; $f_i = 1$ kHz; $T_{amb} = 25$ °C; $R_L = 22$ kΩ; sampling frequency $f_s = 48$ kHz; all voltages referenced to ground (pins V_{SS}); unless otherwise specified.

Symbol	Parameter	Conditions	Min	Typ	Max	Unit
(THD + N)/S	total harmonic distortion-plus-noise to signal ratio	normal mode; at –1 dBFS				
		at 0 dB setting	-	–88	–82	dB
		at 3 dB setting	-	–88	-	dB
		at 6 dB setting	-	–88	-	dB
		at 9 dB setting	-	–88	-	dB
		at 12 dB setting	-	–88	-	dB
		at 15 dB setting	-	–87	-	dB
		at 18 dB setting	-	–85	-	dB
		at 21 dB setting	-	–83	-	dB
		at 24 dB setting	-	–82	-	dB
		normal mode; at –60 dBFS; A-weighted				
		at 0 dB setting	-	–37	–30	dB
		at 3 dB setting	-	–37	-	dB
		at 6 dB setting	-	–37	-	dB
		at 9 dB setting	-	–37	-	dB
		at 12 dB setting	-	–37	-	dB
		at 15 dB setting	-	–37	-	dB
		at 18 dB setting	-	–35	-	dB
		at 21 dB setting	-	–32	-	dB
		at 24 dB setting	-	–30	-	dB
S/N	signal-to-noise ratio	code = 0; A-weighted	89	98	-	dB
α_{cs}	channel separation		-	100	-	dB
Voice analog-to-digital converter						
$V_{i(rms)}$	input voltage (RMS value)	at 0 dBFS digital output; 2.2 kΩ source impedance	-	50.0	-	mV
(THD + N)/S	total harmonic distortion-plus-noise to signal ratio	at –1 dBFS	-	–78	-	dB
		at –20 dBFS	-	–65	-	dB
		at –40 dBFS; A-weighted	-	–47	-	dB
S/N	signal-to-noise ratio	code = 0; A-weighted	-	87	-	dB
Digital-to-analog converter						
Differential mode						
$V_{o(rms)}$	output voltage (RMS value)	at 0 dBFS digital input	1.9	2.0	2.1	V
ΔV_o	output voltage unbalance between channels		-	< 0.1	-	dB
(THD + N)/S	total harmonic distortion-plus-noise to signal ratio	at 0 dBFS	-	–98	–93	dB
		at –20 dBFS	-	–90	-	dB
		at –60 dBFS; A-weighted	-	–50	–45	dB
S/N	signal-to-noise ratio	code = 0; A-weighted	100	110	-	dB
α_{cs}	channel separation		-	114	-	dB

© Koninklijke Philips Electronics N.V. 2005. All rights reserved.

Table 66: Characteristics *...continued*

V_{DDD} = $V_{DDA(AD)}$ = $V_{DDA(DA)}$ = 3.3 V; f_i = 1 kHz; T_{amb} = 25 °C; R_L = 22 kΩ; sampling frequency f_s = 48 kHz; all voltages referenced to ground (pins V_{SS}); unless otherwise specified.

Symbol	Parameter	Conditions	Min	Typ	Max	Unit
Single-ended mode						
$V_{o(rms)}$	output voltage (RMS value)	at 0 dBFS digital input	-	1.0	-	V
ΔV_o	output voltage unbalance between channels		-	< 0.1	-	dB
(THD + N)/S	total harmonic distortion-plus-noise to signal ratio	at 0 dBFS	-	–88	-	dB
		at –20 dBFS	-	–85	-	dB
		at –60 dBFS; A-weighted	-	–45	-	dB
S/N	signal-to-noise ratio	code = 0; A-weighted	-	105	-	dB
α_{cs}	channel separation		-	110	-	dB

[1] The input voltage can be up to 2 V (RMS) when the current through the ADC input pin is limited to approximately 1 mA by using a series resistor.

[2] The input voltage to the ADC scales proportionally with the power supply voltage.

15.1 Timing

Table 67: Timing

V_{DDD} = $V_{DDA(AD)}$ = $V_{DDA(AD)}$ = 2.7 V to 3.6 V; T_{amb} = –20 °C to +85 °C; typical timing specified at sampling frequency f_s = 48 kHz; unless otherwise specified.

Symbol	Parameter	Conditions		Min	Typ	Max	Unit
System clock (see Figure 16)							
T_{sys}	system clock cycle time	f_{sys} = 256f_s	[1]	35	81	780	ns
		f_{sys} = 384f_s	[1]	23	54	520	ns
		f_{sys} = 512f_s	[1]	17	41	390	ns
		f_{sys} = 768f_s	[1]	17	27	260	ns
t_{CWL}	system clock LOW time	f_{sys} < 19.2 MHz		0.3T_{sys}	-	0.7T_{sys}	ns
		f_{sys} ≥ 19.2 MHz		0.4T_{sys}	-	0.6T_{sys}	ns
t_{CWH}	system clock HIGH time	f_{sys} < 19.2 MHz		0.3T_{sys}	-	0.7T_{sys}	ns
		f_{sys} ≥ 19.2 MHz		0.4T_{sys}	-	0.6T_{sys}	ns
I^2S-bus interface							
Serial data of audio ADC and DAC (see Figure 17)							
f_{BCK}	audio bit clock frequency		[2]	-	-	12.8	MHz
$T_{cy(BCK)}$	BCK cycle time			-	-	78	ns
t_{BCKH}	bit clock HIGH time			30	-	-	ns
t_{BCKL}	bit clock LOW time			30	-	-	ns
t_r	rise time			-	-	20	ns
t_f	fall time			-	-	20	ns
$t_{su(WS)}$	word select set-up time			10	-	-	ns
$t_{h(WS)}$	word select hold time			10	-	-	ns
$t_{su(DATAI)}$	data input set-up time			10	-	-	ns
$t_{h(DATAI)}$	data input hold time			10	-	-	ns
$t_{h(DATAO)}$	data output hold time			0	-	-	ns

© Koninklijke Philips Electronics N.V. 2005. All rights reserved.

Table 67: Timing *...continued*

V_{DDD} = $V_{DDA(AD)}$ = $V_{DDA(AD)}$ = 2.7 V to 3.6 V; T_{amb} = −20 °C to +85 °C; typical timing specified at sampling frequency f_s = 48 kHz; unless otherwise specified.

Symbol	Parameter	Conditions		Min	Typ	Max	Unit
$t_{d(DATAO-BCK)}$	data output to bit clock delay			-	-	30	ns
$t_{d(DATAO-WS)}$	data output to word select delay			-	-	30	ns
Serial data of voice ADC							
f_{BCKV}	voice bit clock frequency		[2]	-	-	6.4	MHz
$T_{cy(BCKV)}$	BCKV cycle time			-	-	156	ns
t_{BCKVH}	bit clock HIGH time			50	-	-	ns
t_{BCKVL}	bit clock LOW time			50	-	-	ns
t_r	rise time			-	-	20	ns
t_f	fall time			-	-	20	ns
$t_{su(WSV)}$	word select set-up time			10	-	-	ns
$t_{h(WSV)}$	word select hold time			10	-	-	ns
$t_{h(DATAV)}$	data output hold time			0	-	-	ns
$t_{d(DATAV-BCKV)}$	data output to bit clock delay			-	-	30	ns
$t_{d(DATAV-WSV)}$	data output to word select delay			-	-	30	ns
$t_{d(WSV-BCKV)}$	word select to bit clock delay	WSV-out mode		−30	-	+30	ns
L3-bus interface (see Figure 18 and Figure 19)							
L3CLOCK timing							
$f_{cy(CLK)L3}$	L3CLOCK frequency			-	-	2000	kHz
$T_{cy(CLK)L3}$	L3CLOCK cycle time			500	-	-	ns
$t_{CLK(L3)H}$	L3CLOCK HIGH time			250	-	-	ns
$t_{CLK(L3)L}$	L3CLOCK LOW time			250	-	-	ns
L3MODE timing							
$t_{su(L3)A}$	L3MODE set-up time in address mode			190	-	-	ns
$t_{h(L3)A}$	L3MODE hold time in address mode			190	-	-	ns
$t_{su(L3)D}$	L3MODE set-up time in data transfer mode			190	-	-	ns
$t_{h(L3)D}$	L3MODE hold time in data transfer mode			190	-	-	ns
$t_{stp(L3)}$	L3MODE stop time in data transfer mode			190	-	-	ns
L3DATA timing							
$t_{su(L3)DA}$	L3DATA set-up time in data transfer and address mode			190	-	-	ns
$t_{h(L3)DA}$	L3DATA hold time in data transfer and address mode			30	-	-	ns
$t_{d(L3)R}$	L3DATA delay time for read data			0	-	50	ns

© Koninklijke Philips Electronics N.V. 2005. All rights reserved.

Table 67: Timing *...continued*

V_{DDD} = $V_{DDA(AD)}$ = $V_{DDA(AD)}$ = 2.7 V to 3.6 V; T_{amb} = −20 °C to +85 °C; typical timing specified at sampling frequency f_s = 48 kHz; unless otherwise specified.

Symbol	Parameter	Conditions	Min	Typ	Max	Unit
$t_{dis(L3)R}$	L3DATA disable time for read data		0	-	50	ns
I²C-bus interface timing (see Figure 20)						
SCL timing						
f_{SCL}	SCL clock frequency		0	-	400	kHz
t_{LOW}	SCL LOW time		1.3	-	-	µs
t_{HIGH}	SCL HIGH time		0.6	-	-	µs
t_r	rise time SDA and SCL	[3]	20 + 0.1C_b	-	300	ns
t_f	fall time SDA and SCL	[3]	20 + 0.1C_b	-	300	ns
SDA timing						
t_{BUF}	bus free time between STOP and START condition		1.3	-	-	µs
$t_{SU;STA}$	set-up time repeated START		0.6	-	-	µs
$t_{HD;STA}$	hold time START condition		0.6	-	-	µs
$t_{SU;DAT}$	data set-up time		100	-	-	ns
$t_{HD;DAT}$	data hold time		0	-	-	µs
$t_{SU;STO}$	set-up time STOP condition		0.6	-	-	µs
t_{SP}	pulse width of spikes	[4]	0	-	50	ns
C_b	capacitive load for each bus line		-	-	400	pF

[1] The system clock should not exceed 58 MHz in any mode.

[2] The bit clock frequency should not exceed 256 times the corresponding sampling frequency.

[3] C_b is the total capacitance for each bus line.

[4] To be suppressed by the input filter.

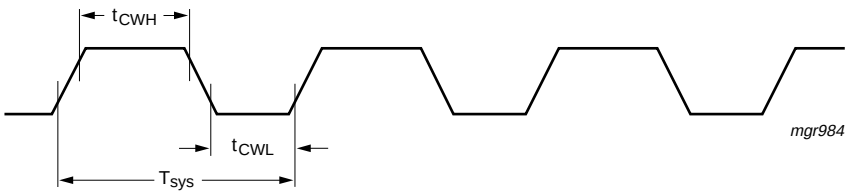

Fig 16. System clock timing

© Koninklijke Philips Electronics N.V. 2005. All rights reserved.

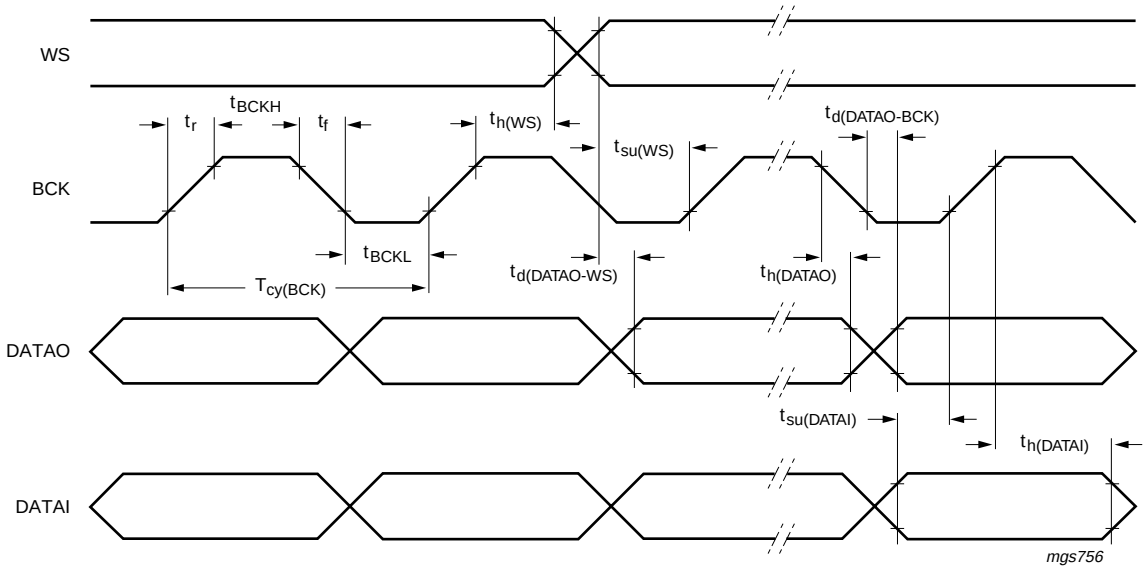

Fig 17. I²S-bus serial interface timing

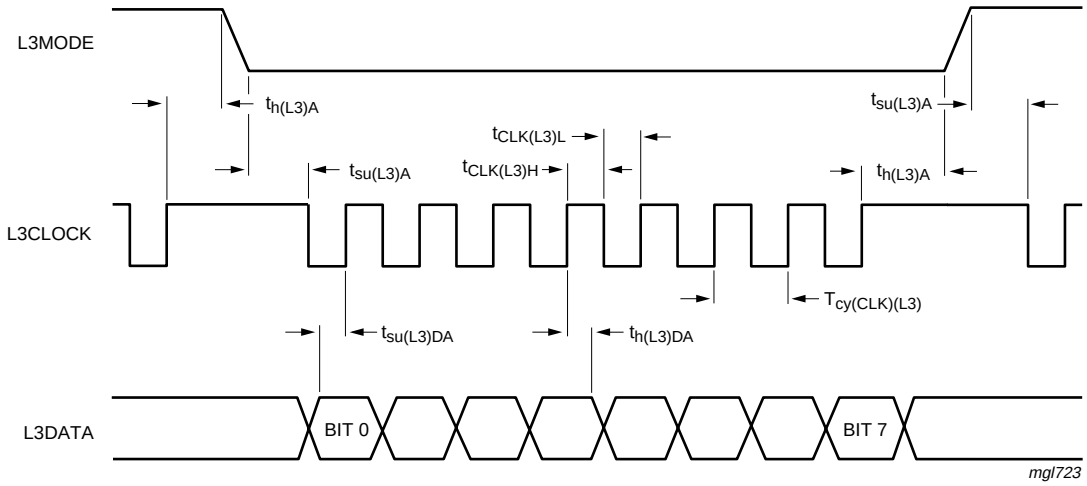

Fig 18. L3-bus address mode timing

© Koninklijke Philips Electronics N.V. 2005. All rights reserved.

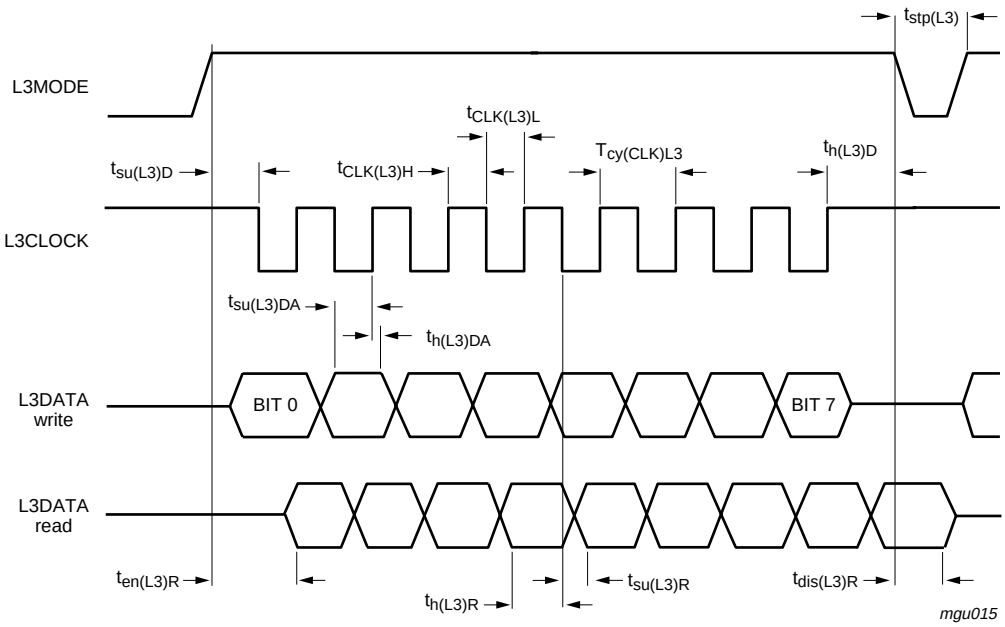

Fig 19. L3-bus data transfer (write and read) mode timing

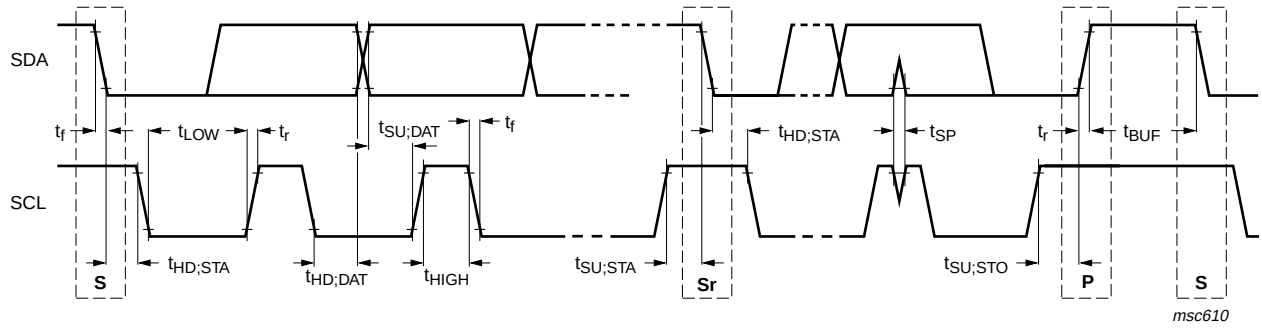

Fig 20. I²C-bus timing

16. Test information

16.1 Quality information

The *General Quality Specification for Integrated Circuits, SNW-FQ-611* is applicable.

© Koninklijke Philips Electronics N.V. 2005. All rights reserved.

17. Package outline

QFP44: plastic quad flat package; 44 leads (lead length 1.3 mm); body 10 x 10 x 1.75 mm **SOT307-2**

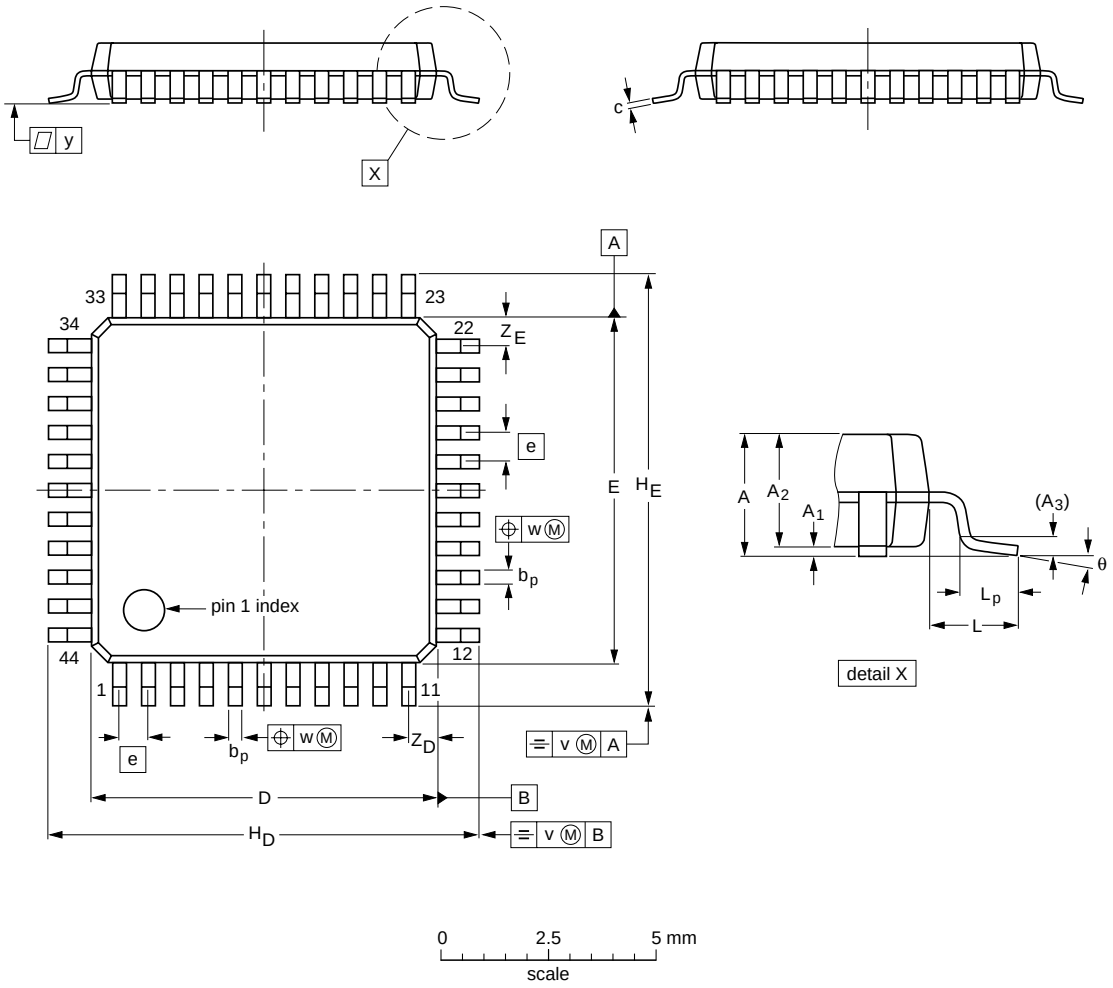

DIMENSIONS (mm are the original dimensions)

UNIT	A max.	A_1	A_2	A_3	b_p	c	$D^{(1)}$	$E^{(1)}$	e	H_D	H_E	L	L_p	v	w	y	$Z_D^{(1)}$	$Z_E^{(1)}$	θ
mm	2.1	0.25 0.05	1.85 1.65	0.25	0.4 0.2	0.25 0.14	10.1 9.9	10.1 9.9	0.8	12.9 12.3	12.9 12.3	1.3	0.95 0.55	0.15	0.15	0.1	1.2 0.8	1.2 0.8	10° 0°

Note

1. Plastic or metal protrusions of 0.25 mm maximum per side are not included.

OUTLINE VERSION	REFERENCES				EUROPEAN PROJECTION	ISSUE DATE
	IEC	JEDEC	JEITA			
SOT307-2						~~97-08-01~~ 03-02-25

Fig 21. Package outline SOT307-2 (QFP44)

© Koninklijke Philips Electronics N.V. 2005. All rights reserved.

18. Handling information

Inputs and outputs are protected against electrostatic discharge in normal handling. However, to be completely safe, it is desirable to take normal precautions appropriate to handling integrated circuits.

19. Soldering

19.1 Introduction to soldering surface mount packages

This text gives a very brief insight to a complex technology. A more in-depth account of soldering ICs can be found in our *Data Handbook IC26; Integrated Circuit Packages* (document order number 9398 652 90011).

There is no soldering method that is ideal for all surface mount IC packages. Wave soldering can still be used for certain surface mount ICs, but it is not suitable for fine pitch SMDs. In these situations reflow soldering is recommended.

19.2 Reflow soldering

Reflow soldering requires solder paste (a suspension of fine solder particles, flux and binding agent) to be applied to the printed-circuit board by screen printing, stencilling or pressure-syringe dispensing before package placement. Driven by legislation and environmental forces the worldwide use of lead-free solder pastes is increasing.

Several methods exist for reflowing; for example, convection or convection/infrared heating in a conveyor type oven. Throughput times (preheating, soldering and cooling) vary between 100 seconds and 200 seconds depending on heating method.

Typical reflow peak temperatures range from 215 °C to 270 °C depending on solder paste material. The top-surface temperature of the packages should preferably be kept:

- below 225 °C (SnPb process) or below 245 °C (Pb-free process)
  - for all BGA, HTSSON..T and SSOP..T packages
  - for packages with a thickness ≥ 2.5 mm
  - for packages with a thickness < 2.5 mm and a volume ≥ 350 mm^3 so called thick/large packages.
- below 240 °C (SnPb process) or below 260 °C (Pb-free process) for packages with a thickness < 2.5 mm and a volume < 350 mm^3 so called small/thin packages.

Moisture sensitivity precautions, as indicated on packing, must be respected at all times.

19.3 Wave soldering

Conventional single wave soldering is not recommended for surface mount devices (SMDs) or printed-circuit boards with a high component density, as solder bridging and non-wetting can present major problems.

To overcome these problems the double-wave soldering method was specifically developed.

If wave soldering is used the following conditions must be observed for optimal results:

© Koninklijke Philips Electronics N.V. 2005. All rights reserved.

- Use a double-wave soldering method comprising a turbulent wave with high upward pressure followed by a smooth laminar wave.
- For packages with leads on two sides and a pitch (e):
  - larger than or equal to 1.27 mm, the footprint longitudinal axis is **preferred** to be parallel to the transport direction of the printed-circuit board;
  - smaller than 1.27 mm, the footprint longitudinal axis **must** be parallel to the transport direction of the printed-circuit board.

  The footprint must incorporate solder thieves at the downstream end.
- For packages with leads on four sides, the footprint must be placed at a 45° angle to the transport direction of the printed-circuit board. The footprint must incorporate solder thieves downstream and at the side corners.

During placement and before soldering, the package must be fixed with a droplet of adhesive. The adhesive can be applied by screen printing, pin transfer or syringe dispensing. The package can be soldered after the adhesive is cured.

Typical dwell time of the leads in the wave ranges from 3 seconds to 4 seconds at 250 °C or 265 °C, depending on solder material applied, SnPb or Pb-free respectively.

A mildly-activated flux will eliminate the need for removal of corrosive residues in most applications.

19.4 Manual soldering

Fix the component by first soldering two diagonally-opposite end leads. Use a low voltage (24 V or less) soldering iron applied to the flat part of the lead. Contact time must be limited to 10 seconds at up to 300 °C.

When using a dedicated tool, all other leads can be soldered in one operation within 2 seconds to 5 seconds between 270 °C and 320 °C.

19.5 Package related soldering information

Table 68: Suitability of surface mount IC packages for wave and reflow soldering methods

Package [1]	Soldering method	
	Wave	Reflow [2]
BGA, HTSSON..T [3], LBGA, LFBGA, SQFP, SSOP..T [3], TFBGA, VFBGA, XSON	not suitable	suitable
DHVQFN, HBCC, HBGA, HLQFP, HSO, HSOP, HSQFP, HSSON, HTQFP, HTSSOP, HVQFN, HVSON, SMS	not suitable [4]	suitable
PLCC [5], SO, SOJ	suitable	suitable
LQFP, QFP, TQFP	not recommended [5] [6]	suitable
SSOP, TSSOP, VSO, VSSOP	not recommended [7]	suitable
CWQCCN..L [8], PMFP [9], WQCCN..L [8]	not suitable	not suitable

[1] For more detailed information on the BGA packages refer to the *(LF)BGA Application Note* (AN01026); order a copy from your Philips Semiconductors sales office.

© Koninklijke Philips Electronics N.V. 2005. All rights reserved.

[2] All surface mount (SMD) packages are moisture sensitive. Depending upon the moisture content, the maximum temperature (with respect to time) and body size of the package, there is a risk that internal or external package cracks may occur due to vaporization of the moisture in them (the so called popcorn effect). For details, refer to the Drypack information in the *Data Handbook IC26; Integrated Circuit Packages; Section: Packing Methods*.

[3] These transparent plastic packages are extremely sensitive to reflow soldering conditions and must on no account be processed through more than one soldering cycle or subjected to infrared reflow soldering with peak temperature exceeding 217 °C ± 10 °C measured in the atmosphere of the reflow oven. The package body peak temperature must be kept as low as possible.

[4] These packages are not suitable for wave soldering. On versions with the heatsink on the bottom side, the solder cannot penetrate between the printed-circuit board and the heatsink. On versions with the heatsink on the top side, the solder might be deposited on the heatsink surface.

[5] If wave soldering is considered, then the package must be placed at a 45° angle to the solder wave direction. The package footprint must incorporate solder thieves downstream and at the side corners.

[6] Wave soldering is suitable for LQFP, QFP and TQFP packages with a pitch (e) larger than 0.8 mm; it is definitely not suitable for packages with a pitch (e) equal to or smaller than 0.65 mm.

[7] Wave soldering is suitable for SSOP, TSSOP, VSO and VSSOP packages with a pitch (e) equal to or larger than 0.65 mm; it is definitely not suitable for packages with a pitch (e) equal to or smaller than 0.5 mm.

[8] Image sensor packages in principle should not be soldered. They are mounted in sockets or delivered pre-mounted on flex foil. However, the image sensor package can be mounted by the client on a flex foil by using a hot bar soldering process. The appropriate soldering profile can be provided on request.

[9] Hot bar soldering or manual soldering is suitable for PMFP packages.

© Koninklijke Philips Electronics N.V. 2005. All rights reserved.

20. Revision history

Table 69: Revision history

Document ID	Release date	Data sheet status	Change notice	Doc. number	Supersedes
UDA1384_2	20050117	Product data sheet	-	9397 750 14366	UDA1384_1
Modifications:	• The format of this data sheet has been redesigned to comply with the new presentation and information standard of Philips Semiconductors • Section 4 “Quick reference data”: Added values for $I_{DDD(pd)}$ • Section 14 “Static characteristics”: Added values for $I_{DDD(pd)}$ • Section 15 “Dynamic characteristics”: Removed PSRR specification and (THD+N)/S at −20 dBFS, added (THD+N)/S for DAC differential mode				
UDA1384_1	20031009	Preliminary specification	-	9397 750 12043	-

© Koninklijke Philips Electronics N.V. 2005. All rights reserved.

21. Data sheet status

Level	Data sheet status [1]	Product status [2] [3]	Definition
I	Objective data	Development	This data sheet contains data from the objective specification for product development. Philips Semiconductors reserves the right to change the specification in any manner without notice.
II	Preliminary data	Qualification	This data sheet contains data from the preliminary specification. Supplementary data will be published at a later date. Philips Semiconductors reserves the right to change the specification without notice, in order to improve the design and supply the best possible product.
III	Product data	Production	This data sheet contains data from the product specification. Philips Semiconductors reserves the right to make changes at any time in order to improve the design, manufacturing and supply. Relevant changes will be communicated via a Customer Product/Process Change Notification (CPCN).

[1] Please consult the most recently issued data sheet before initiating or completing a design.

[2] The product status of the device(s) described in this data sheet may have changed since this data sheet was published. The latest information is available on the Internet at URL http://www.semiconductors.philips.com.

[3] For data sheets describing multiple type numbers, the highest-level product status determines the data sheet status.

22. Definitions

Short-form specification — The data in a short-form specification is extracted from a full data sheet with the same type number and title. For detailed information see the relevant data sheet or data handbook.

Limiting values definition — Limiting values given are in accordance with the Absolute Maximum Rating System (IEC 60134). Stress above one or more of the limiting values may cause permanent damage to the device. These are stress ratings only and operation of the device at these or at any other conditions above those given in the Characteristics sections of the specification is not implied. Exposure to limiting values for extended periods may affect device reliability.

Application information — Applications that are described herein for any of these products are for illustrative purposes only. Philips Semiconductors make no representation or warranty that such applications will be suitable for the specified use without further testing or modification.

23. Disclaimers

Life support — These products are not designed for use in life support appliances, devices, or systems where malfunction of these products can reasonably be expected to result in personal injury. Philips Semiconductors customers using or selling these products for use in such applications do so at their own risk and agree to fully indemnify Philips Semiconductors for any damages resulting from such application.

Right to make changes — Philips Semiconductors reserves the right to make changes in the products - including circuits, standard cells, and/or software - described or contained herein in order to improve design and/or performance. When the product is in full production (status ‘Production’), relevant changes will be communicated via a Customer Product/Process Change Notification (CPCN). Philips Semiconductors assumes no responsibility or liability for the use of any of these products, conveys no license or title under any patent, copyright, or mask work right to these products, and makes no representations or warranties that these products are free from patent, copyright, or mask work right infringement, unless otherwise specified.

24. Contact information

For additional information, please visit: **http://www.semiconductors.philips.com**

For sales office addresses, send an email to: **sales.addresses@www.semiconductors.philips.com**

© Koninklijke Philips Electronics N.V. 2005. All rights reserved.

25. Contents

1 General description 1
2 Features 1
2.1 General 1
2.2 Multiple format data interface 2
2.3 Digital sound processing 2
2.4 Advanced audio configuration 2
3 Applications 2
4 Quick reference data 2
5 Ordering information 3
6 Block diagram 4
7 Pinning information 5
7.1 Pinning 5
7.2 Pin description 5
8 Functional description 7
8.1 System clock 7
8.2 Audio analog-to-digital converter (audio ADC) . 8
8.3 Voice Analog-to-Digital Converter (voice ADC) 8
8.4 Decimation filter of audio ADC 8
8.5 Decimation filter of voice ADC 8
8.6 Interpolation filter of DAC 9
8.7 Noise shaper of DAC 9
8.8 Digital mixer 9
8.9 Audio digital-to-analog converters 10
8.10 Power-on reset 10
8.11 Audio digital interface 11
8.12 Voice digital interface 14
8.13 DSD mode 14
8.14 Microcontroller interface mode 15
9 L3-bus interface 15
9.1 General 15
9.2 Device addressing 16
9.3 Register addressing 16
9.4 Data write mode 18
9.5 Data read mode 18
10 I²C-bus interface 19
10.1 General 19
10.2 Characteristics of the I²C-bus 19
10.3 Bit transfer 19
10.4 Byte transfer 20
10.5 Data transfer 20
10.6 Start and stop conditions 20
10.7 Acknowledgment 20
10.8 Device address 21
10.9 Register address 21
10.10 Write and read data 21
10.11 Write cycle 22
10.12 Read cycle 22
11 Register mapping 23
11.1 Address mapping 23
11.2 Register mapping 25
11.3 System settings 27
11.4 Audio ADC and DAC subsystem settings 29
11.5 Voice ADC system settings 30
11.6 Status output register 32
11.7 DAC channel selection 33
11.8 DAC features settings 34
11.9 DAC channel 1 to channel 6 settings 36
11.10 DAC mixing channel settings 36
11.11 Audio ADC 1 and ADC 2 input amplifier gain settings 37
11.12 Voice ADC gain settings 38
11.13 Supplemental settings 1 39
11.14 Supplemental settings 2 39
12 Limiting values 40
13 Thermal characteristics 40
14 Static characteristics 41
15 Dynamic characteristics 42
15.1 Timing 44
16 Test information 48
16.1 Quality information 48
17 Package outline 49
18 Handling information 50
19 Soldering 50
19.1 Introduction to soldering surface mount packages 50
19.2 Reflow soldering 50
19.3 Wave soldering 50
19.4 Manual soldering 51
19.5 Package related soldering information 51
20 Revision history 53
21 Data sheet status 54
22 Definitions 54
23 Disclaimers 54
24 Licenses 54
25 Contact information 54

© Koninklijke Philips Electronics N.V. 2005

All rights are reserved. Reproduction in whole or in part is prohibited without the prior written consent of the copyright owner. The information presented in this document does not form part of any quotation or contract, is believed to be accurate and reliable and may be changed without notice. No liability will be accepted by the publisher for any consequence of its use. Publication thereof does not convey nor imply any license under patent- or other industrial or intellectual property rights.

Date of release: 17 January 2005
Document number: 9397 750 14366

Published in The Netherlands